NC STATE UNIVERSITY

Mechanical Engineering Systems
BSE at Havelock

MES401-402

CAPSTONE SENIOR DESIGN

UNIVERSAL PROOF LOADER

3 May 2016

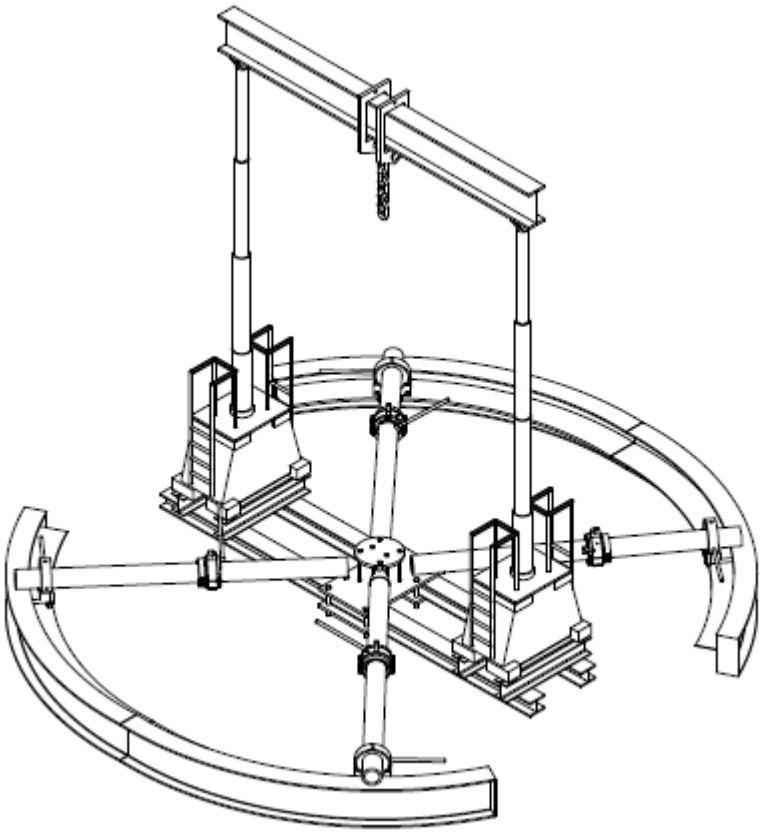

Brenda Hathcock
Samuel Jones
Kevin Tierney

I have neither given nor received any unauthorized assistance on this report.

Table of Contents

I. EXECUTIVE SUMMARY 1
II. REQUIREMENTS DEFINITION 2
1. Background 2
2. Requirements Developed 2
3. Project Management 6
A. Project Schedule / Technical Event Plan 6
B. Risk Management Approach 7
4. Team Structure 7
5. Project Deliverables 8
II. CONCEPTUAL/PRELIMINARY DESIGN 8
1. Finalizing the Conceptual Design 8
2. Alternatives Considered 8
A. Alternative A 8
B. Alternative B 8
C. Alternative C 8
D. Alternative D 8
E. Alternative E 8
F. Selection Criteria 9
G. Analysis and Decision 9
3. Proposed Design 10
III. DETAILED DESIGN 14
1. Presentation of Structure (Sub-Systems) 14
A. Base Structure 14
B. Legs 14
C. Cam Mechanism 15
D. Adjuster 42 15
E. Adapters 16
F. Gantry 17
G. Jib Crane 19
H. Safety 19
I. Additional Components 20
2. Design Components 20
3. Design Optimization 20
4. Strength Analysis 20
5. Itemized Cost Estimate 20
IV. TEST PLAN 22
V. CONCLUSION AND FINAL RESULTS 22
VI. REFERENCES 22
VII. APPENDICES 23
1. APPENDIX A (Brenda's Analysis) 23
2. APPENDIX B (Kevin's Analysis) 24
3. APPENDIX C (Sam's Analysis) 25
4. APPENDIX D (Drawing Package) 26
5. APPENDIX E. (Sling Database) 27
6. APPENDIX F. (Sling ID Manual) 28
7. APPENDIX G. (Renders of System) 29

I. EXECUTIVE SUMMARY

The Department of the Navy uses hundreds of unique slings to lift aircraft and aircraft parts. At manufacture and after structural repairs, these slings must be proof loaded with a load between 2 and 2.5 times the safe working load of the sling. Many slings require unique procedures and tooling to be effectively proof loaded. This tooling can be misplaced, neglected, is infrequently used and takes up considerable storage space.

The team was presented with the task of designing a tool that could be used to proof load all known slings and reduce or eliminate the need for sling specific tooling.

Research was conducted and data tabulated. Over 300 slings were cataloged.

Requirements were defined using the systems engineering process to ensure the customer's need would be fully satisfied.

A concept for a proofloader with legs radiating from a central point and the top of the sling being attached and loaded by a central horizontal beam was developed and approved. Options were considered and the most likely to fully satisfy the requirements was selected.

The Universal Proof Loader uses a hydraulic gantry to both adjust the height of the system and apply the load. The radial legs are made of steel tubes that have sliding adjusters to which the bottom of the sling connects. The combination of angular and radial movement gives the greatest range of adjustment. The legs lock by means of cams into an outer ring and are supported by casters during rotation. The sliding adjusters lock by means of a collet and increase their clamping force as a load is applied. Within the range of motion, the combination of the cam and collet give infinite adjustability with a minimum of moving parts. A jib crane provides for movement of heavy or bulky slings and a curtain of chainmail provides for safe operation. The central structure where the legs connect is attached to the supports for the hydraulic gantry and contains the forces during testing within the structure, with the exception of those seen at the outer ring which is secured to a foundation.

Detailed analysis and drawings were produced for critical items and a safety factor of 5:1 to ultimate strength and 3:1 to yield strength was maintained throughout.

The Universal Proof Loader has the following capabilities:

- 130,000 lbs. on 4 legs
- 97,500 lbs. on 3 legs
- 65,000 lbs. on 2 legs
- 130,000 lbs. straight pull
- 40-90^0 from horizontal
- 0-25^0 from plane of leg

II. REQUIREMENTS DEFINITION

1. Background

The Fleet Readiness Center East originally came to the team with a need to proofload slings. A sling was roughly defined as a piece of equipment used to facilitate the lifting of something else, albeit an aircraft or a component. The FRC has a requirement to test these slings to twice their working load in order to make sure they are safe to use for everyday work. The job tasked to the team was to design a proofloader to allow the FRC to test their own slings instead of outsourcing the job. This would allow them to proofload slings faster and cheaper than their current abilities allowed.

2. Requirements Developed

In accordance with the systems design approach, once the need was identified by the customer, considerable research was conducted to determine the requirements for an engineered solution that would fully satisfy the customer's need. To be successful, the system to be designed is considered a black box, and its role in the larger system is analyzed and understood. The interfaces with people, policies and things are identified and this is recorded graphically in a context diagram. This can be viewed in Figure 1.

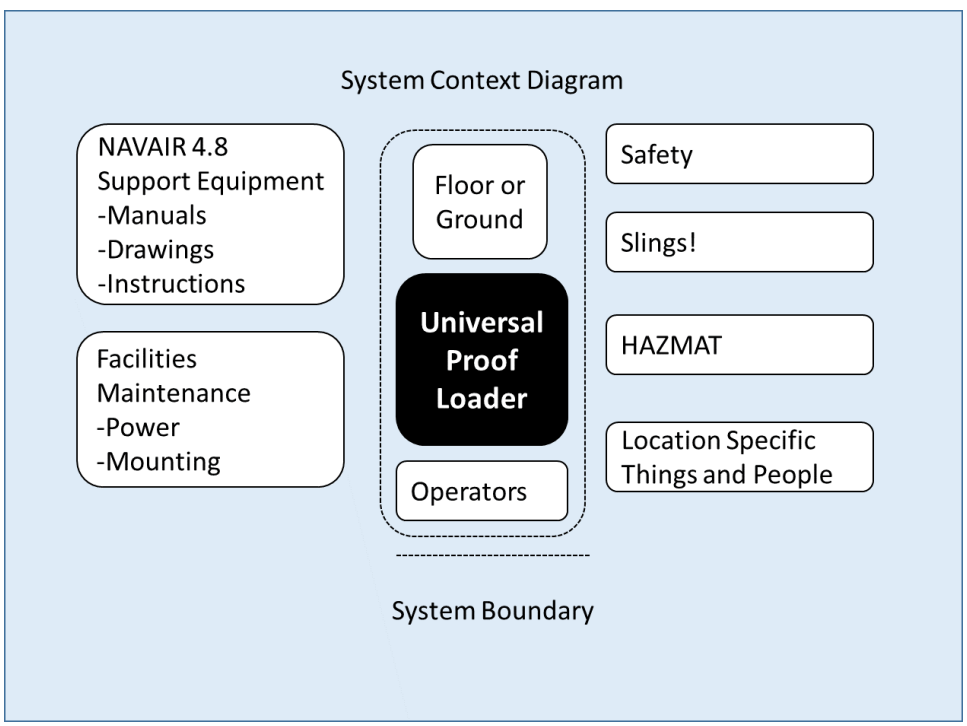

Figure 1

With the aid of the context diagram, a stakeholder table is constructed to identify the people who will interact with the system to be designed throughout its life cycle and understand their role and authority in the design process. This can be seen in Table 1.

Stakeholder	Key Concerns	Authority
Scott Fisher / Andrew Scott / Patrick Townsend	Device proof loads all slings as if in use	Yes
Mark Petkus	Detects slings that might fail	
Michael Linzer	Project meets supervisor's expectations	
Proof Loading Personnel	Ease of use	
FRC Safety	Safety and regulations	Yes
Sling Owners	Turnaround Time / Cost / Damaged Slings	
Dr. Fortney	MES program reputation	Yes
FRC Facilities	Resources	

Table 1

One of the key physical interfaces identified for the Universal Proof Loader was the sling to be tested. In order to fully understand the range of slings, a survey was conducted of the sling manuals available via Fleet Readiness Center East (FRCE). Approximately 300 slings were cataloged, with their safe working load (SWL), proof load requirement, number and type of connections, use of spreader bars or welded frames, and the locations of the connections in respect to the lifting point all being noted. This data is available in Appendix E. An identification manual was created to understand visually how the slings looked and is available in Appendix F. To facilitate analysis and aid in decision making, a histogram was chosen to display the slings grouped by their proof load requirement. This can be seen in Figure 2.

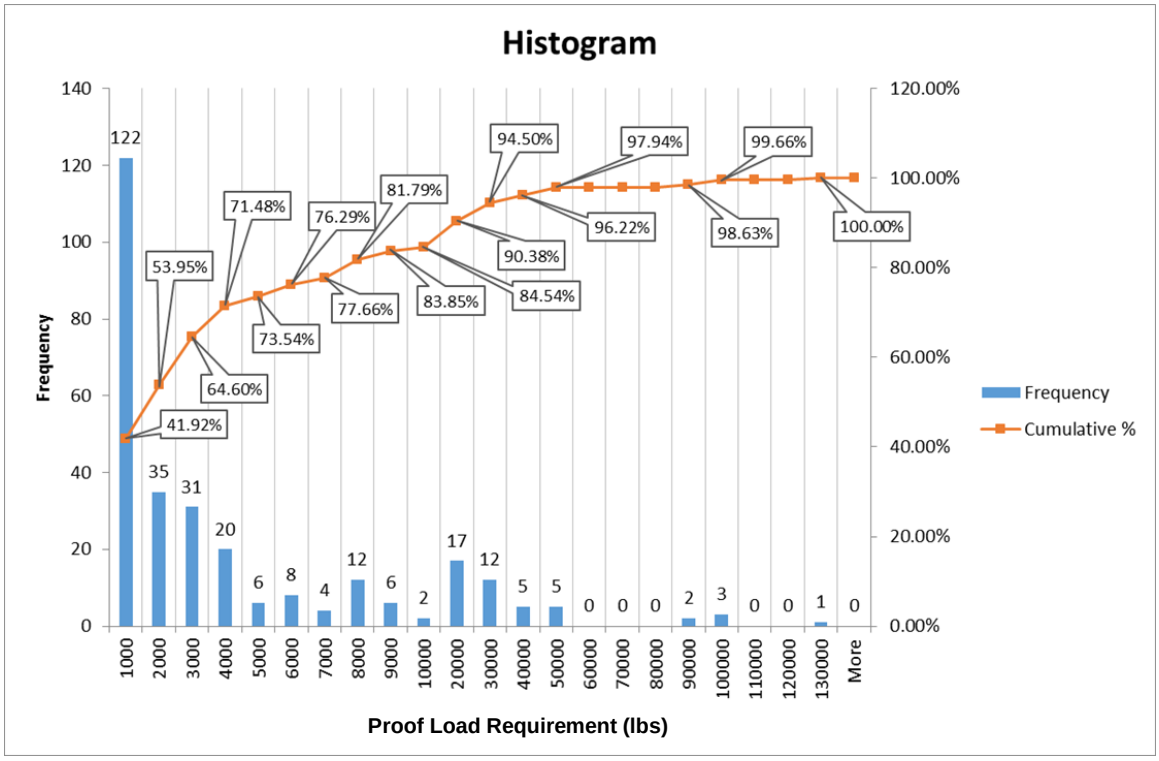

Figure 2

An important fact taken from the histogram was the concentration of slings of lower proof load requirements. It was noted that out of the approximately 300 slings cataloged only six (6) required proof loads above 50,000lbs. At this point, the customer was advised of the cost/benefit tradeoffs and instructed the team to continue to design the system to accommodate all sling capacities.

At this point the team was able to generate a concise statement of what the customer required in order to solve the problem they brought. This needs statement was:

"A Universal Sling Proof Loader (UPL) to load slings, in their usage configuration, up to 130,000 pounds."

The team then looked at the system and identified the tasks it would be required to accomplish. These tasks were grouped logically by function and organized into a simple table known as a functional block diagram. This high level architecting is displayed in Table 2 below.

Universal Proof Loader (UPL)			

Connect to Slings:
• Connect to top of sling
• Connect to bottom of sling
  ○ Baskets
  ○ Pins
  ○ Bolts
  ○ Shackles
  ○ Chain loops
  ○ Hooks
	Position Sling Connections:
	• Adjustable
	  ○ Adjustable in length and width
	  ○ Adjustable in height
	• Fixed
		Load Slings:
		• Apply a load
		• Resist the load
		• Measure a load
		• Measure elapsed time
			Safety:
			• Keep operators and bystanders safe
			  ○ Absorb energy from sling failure

Table 2

With the guidance of the needs statement, the functional block diagram and other tools, the team was able to understand the system to be designed from an operational and a technical perspective. Formal requirements were developed as a binding agreement with the customer of what the Universal Proof Loader would do and under what conditions it would be able to perform the task. The requirements were developed in partnership with the customer to ensure that the original need would be fully satisfied. These requirements are listed in Table 3.

SYSTEM REQUIREMENTS MATRIX					
1	0		Need	I	Inspection
1	1	0	System Requirement	A	Analysis
1	1	1	System Sub-Requirement	D	Demonstration
				T	Test

Need	Req #	Sub-Req	Description	Verification			
				I	A	D	T
1	**0**	**0**	**1.0 The Universal Proof Loader (UPL) design shall connect to all slings listed in the interface document in the same configuration as when in normal use.**				
1	1	0	The UPL design shall have a means to connect to the top of the slings as stated in the interface document.	X			
1	2	0	The UPL design shall have a means to connect to the bottom of the slings as stated in the interface document.	X			
1	3	0	The UPL design shall have a means to connect to slings of various sizes as stated in the Interface document.	X			
1	4	0	The UPL design shall accommodate sling frames as stated in the Interface document.	X			
1	5	0	The UPL design shall assist in connecting to the top of the sling.	X			
2	**0**	**0**	**2.0 The Universal Proof Loader (UPL) shall apply a tensile load typically equal to two times the safe working load (SWL) of the sling to the top of the sling while restraining the bottom of the sling.**				
2	1	0	The UPL design shall apply loads from 100 to 130,000lbs in 10 lbs increments up to 10,000 lbs and 100 lb increments from 10,000 to 130,000 lbs.		X		
2	1	1	The UPL design should apply loads in 10 lb increments up to 10,000 lbs				
2	1	2	The UPL design should apply loads in 100 lb increments from 10,000 lbs to 130,000 lbs				
2	2	0	The UPL design shall display the load applied	X			
2	3	0	The UPL design shall release the load in a controlled manner when the operator ends the prooftest.	X			
2	4	0	The UPL design shall hold the load for no less than 3 minutes.	X			
2	5	0	The UPL design shall time the prooftest with a resolution of 1 second.	X			
2	6	0	The UPL design should display the load on up to 5 sling legs.	X			
3	**0**	**0**	**3.0 The Universal Proof Loader (UPL) shall operate safely and comply with all local and federal regualtions.**				
3	1	0	The UPL design shall meet all FRC safety requirements.		X		
3	2	0	The UPL design shall contain an emergency stop.	X			
3	3	0	The UPL design shall a means to release the load in a controlled manner after an emergency stop is activated.	X			
3	4	0	The UPL design shall have a means to absorb energy from a catastrophic sling failure.	X			
4	**0**	**0**	**4.0 The Universal Proof Loader (UPL) design shall accommodate for its operational environment**				
4	1	0	The UPL design's effectiveness shall not depend on weather.	X			
4	2	0	The UPL design will be in a lighted area to ensure safe operation.	X			

Table 3

3. Project Management

A. Project Schedule / Technical Event Plan

With requirements defined, a schedule was outlined for the remainder of the project to allocate time to each stage of the project. In addition, a due date of 25 Apr 2016 was established. An early version of the schedule can be seen in Table 4.

Task Name	Duration	Start	Finish
Prep For SRR	**36 days**	**Thu 9/24/15**	**Thu 11/12/15**
Needs Verified	4 days	Thu 9/24/15	Tue 9/29/15
Operation Definition Outputs	**5 days**	**Thu 9/24/15**	**Wed 9/30/15**
Requirements Definition	10 days	Thu 10/1/15	Wed 10/14/15
Informal Requirements Review	3 days	Thu 10/8/15	Mon 10/12/15
Other SRR Misc SRR Tasks	3 days	Thu 10/1/15	Mon 10/5/15
Verification Matrix	7 days	Thu 10/8/15	Fri 10/16/15
SRR Presentation Complete	5 days	Mon 10/19/15	Fri 10/23/15
SRR Handouts Produced	3 days	Wed 10/21/15	Fri 10/23/15
SRR Dry Run	3 days	Mon 10/26/15	Wed 10/28/15
SRR	**1 day**	**Thu 11/12/15**	**Thu 11/12/15**
Prep for Concept Review	**25 days**	**Fri 11/13/15**	**Mon 1/18/16**
Concept Brainstorming	1 day	Fri 11/13/15	Fri 11/13/15
Individual Concept Development	10 days	Mon 11/16/15	Fri 11/27/15
Concept MoE Analysis	1 day	Mon 11/30/15	Mon 11/30/15
Determine Final Concept (Hybrid)	1 day	Tue 12/1/15	Tue 12/1/15
Concept Review Presentation Prep	5 days	Wed 1/6/16	Tue 1/12/16
Concept Review Dry Run	3 days	Wed 1/13/16	Fri 1/15/16
Concept Review	1 day	Mon 1/18/16	Mon 1/18/16
Prep for PDR	**33 days**	**Tue 1/19/16**	**Thu 3/3/16**
Break Up PDR Tasks	1 day	Tue 1/19/16	Tue 1/19/16
Research Purchased Part Suppliers / Finalize Choices	10 days	Wed 1/20/16	Tue 2/2/16
Critical Solid Modeling	10 days	Wed 1/20/16	Tue 2/2/16
Determine and Conduct Critical Strength Analysis	15 days	Wed 2/3/16	Tue 2/23/16
Critical Drawings	10 days	Wed 2/3/16	Tue 2/16/16
Develop BOM	5 days	Wed 2/3/16	Tue 2/9/16
PDR Presentation Prep	3 days	Wed 2/24/16	Fri 2/26/16
PDR Dry Run	3 days	Mon 2/29/16	Wed 3/2/16
PDR	**1 day**	**Thu 3/3/16**	**Thu 3/3/16**
Prep for CDR	**37 days**	**Fri 3/4/16**	**Mon 4/25/16**
Make Changes from PDR	3 days	Fri 3/4/16	Tue 3/8/16
Verify Changes from PDR	2 days	Wed 3/9/16	Thu 3/10/16
Things that were correct from PDR	**25 days**	**Fri 3/4/16**	**Thu 4/7/16**
Finish Solid Modeling	10 days	Fri 3/4/16	Thu 3/17/16
Finish Strength Analysis	7 days	Fri 3/18/16	Mon 3/28/16
Finish Drawings	15 days	Fri 3/18/16	Thu 4/7/16
Produce Other Documents	10 days	Fri 3/4/16	Thu 3/17/16
Things that we need to change from PDR	**20 days**	**Fri 3/11/16**	**Thu 4/7/16**
Conduct More Research	5 days	Fri 3/11/16	Thu 3/17/16
Solid Modeling	5 days	Fri 3/18/16	Thu 3/24/16
Strength Analysis	5 days	Fri 3/25/16	Thu 3/31/16
Drawings	10 days	Fri 3/25/16	Thu 4/7/16
FTR Presentation Prep	5 days	Fri 4/8/16	Thu 4/14/16
FTR Dry Run	3 days	Fri 4/15/16	Tue 4/19/16
FTR	**1 day**	**Mon 4/25/16**	**Mon 4/25/16**
Prep for Final Pres	**5 days**	**Tue 4/26/16**	**Mon 5/2/16**
Final Presentation Prep	1 day	Tue 4/26/16	Tue 4/26/16
Final Presentation Dry Run	1 day	Wed 4/27/16	Wed 4/27/16
Final Presentation	**1 day**	**Mon 5/2/16**	**Mon 5/2/16**

Table 4

B. Risk Management Approach

The team took a proactive approach to managing risk. In addition to the design requirements including 5:1 to ultimate strength and 3:1 to yield strength, likely modes of failure were considered at every step of the design. When these modes were considered serious, corrective actions or redesign of the component was initiated to eliminate all unnecessary risks. The remaining risks are identified in the Risk Diagram, Figure 3, below.

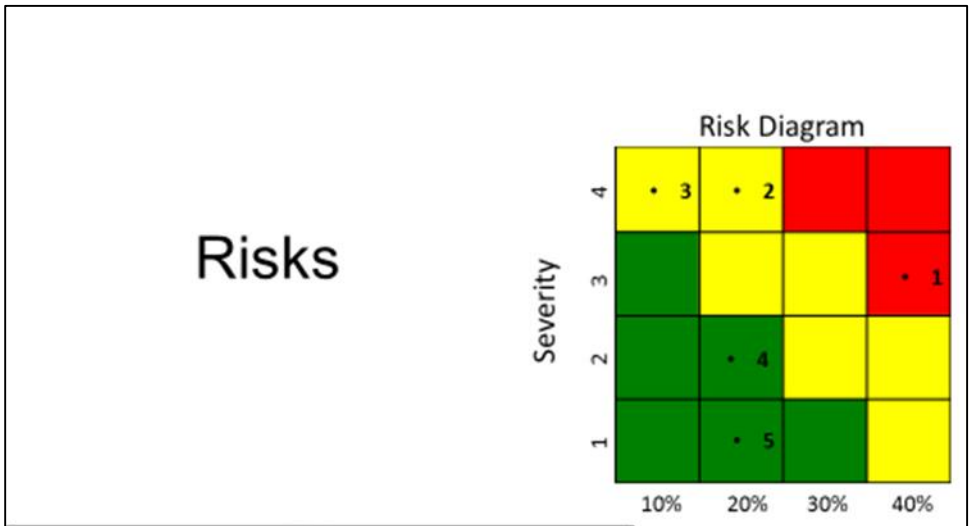

Risks		
Cause	**Danger**	**Ref.**
Manual Control Accuracy	Broken Sling	1
Gantry Capacity Exceeds Design Capacity	Broken UPL	2
Improper Connection of the Sling	Damaged UPL	3
Outer Ring Specifications Undefined	Redesign	4
Adjuster Jamming After High Loads	Delay	5

Figure 3

4. Team Structure

Team Members and Key Roles			
	Brenda Hathcock	**Kevin Tierney**	**Samuel Jones**
Up to SRR	Facilitator	Recorder	Team Leader
SRR – CR – PDR	Team Leader	Facilitator	Recorder
PDR – CDR – Final	Recorder	Team Leader	Facilitator

5. **Project Deliverables**
    1. Detailed drawings for manufacture of UPL
    2. Operating instructions
    3. Preoperational and periodic maintenance instructions
    4. CAD files

II. CONCEPTUAL/PRELIMINARY DESIGN

1. Finalizing the Conceptual Design

Once we had settled on a vertical proofloader, the team's biggest point of debate was the design of the vertical section of the proof loader. The base for the sling points had been settled since the first individual concept design meeting. The team had settled on the swinging legs all connected to a center point at the middle of the proof loader, and the only major design decision left to decide was the sling connection at the top, and how the load would be applied.

2. Alternatives Considered

A. Alternative A

Design A used a solid frame with a fixed overhead beam to which a hydraulic cylinder was attached. Additional hydraulic cylinders could be used for lighter loads. Connecting slings of various heights would be accomplished by lifting the worker and sling to the connection point by an unspecified method.

B. Alternative B

Design B used a hydraulic gantry, but only for adjusting the height of the sling top connection and bringing the top connection point within easy reach. A second, and possibly third, automatically controlled, hydraulic cylinder(s) would be connected to the gantry beam and used to conduct the test.

C. Alternative C

Design C used a hydraulic gantry that would position the top connection and apply the load. An unspecified way would be needed to transition between movement and testing modes.

D. Alternative D

Design D used a fixed vertical frame with a moveable horizontal beam. The load would be applied by an automatically controlled hydraulic cylinder attached to center of the horizontal beam. Hydraulic cylinders or screw jacks would position the beam and be large enough to support the loads during testing.

E. Alternative E

Design E also used a fixed vertical frame with a moveable horizontal beam. The load would also be applied by an automatically controlled hydraulic cylinder attached to center of the horizontal beam. However, the hydraulic cylinders or screw jacks would position the beam and be only large enough to support the loads during movement. Once

in approximate position, mechanical locks such as pins would be used to connect the beam to the vertical frame which would carry the load during testing.

F. Selection Criteria

Using Measures of Effectiveness defined during Requirements Definition, each option was evaluated on the following criteria:

- SAFETY
- RELIABILITY
- PERCENTAGE *(of known slings)* LOADED
- CONNECTION ACCURACY
- TURN AROUND TIME
- COST

G. Analysis and Decision

Although there remained concerns over the Hydraulic Gantry's ability to load slings accurately and resist tipping over, it was determined that both of these could be satisfactorily overcome by the use of an automatic, feedback loop control system, sensors and attentive operators, and that the concern was outweighed by the advantages in reliability, turnaround time, and cost. Therefore, Design C was chosen and further refinement commenced.

3. Proposed Design

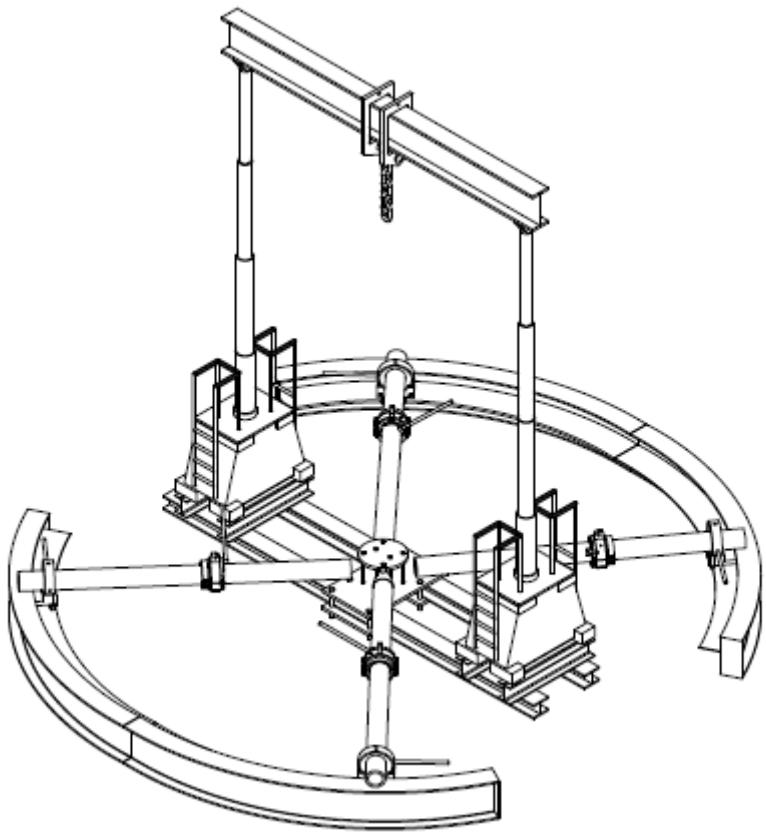

Figure 4

The final proposed design is a hydraulic gantry system that will both provide adjustable height for a range of sling heights and load the slings. The bottom of the slings will be attached to 4 adjustable legs to coincide with the slings' in use configuration. This design can be seen in Figure 4. High quality renders of the system are available in Appendix G.

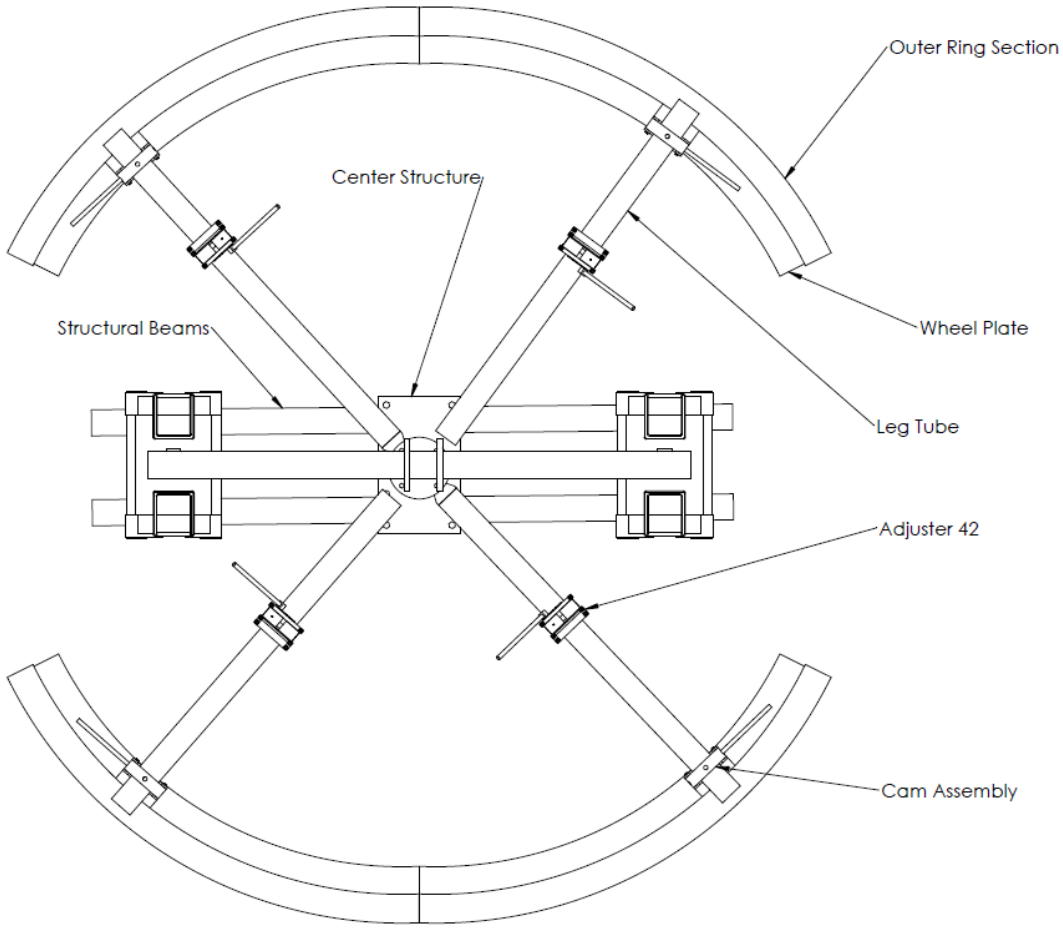

Figure 5

Refer to Figure 5. The Leg Tubes are connected to the Center Structure at one point and have Cam Assemblies on their outer ends. The Cam Assemblies allow the Leg Tubes to rotate by means of wheels that can be lowered and ride along the Wheel Plate. The Cam Assembly also interfaces with the Outer Ring Sections to hold the Leg Tube firmly in place during testing procedures. The Adjuster 42 is assembled onto the Leg Tubes and can be moved along its length. The ability to move the Leg Tubes and Adjuster 42 allows for a wide range of sling connection points to exactly coincide with the designed lifting points of the slings. Structural Beams transfer loads within the assembly.

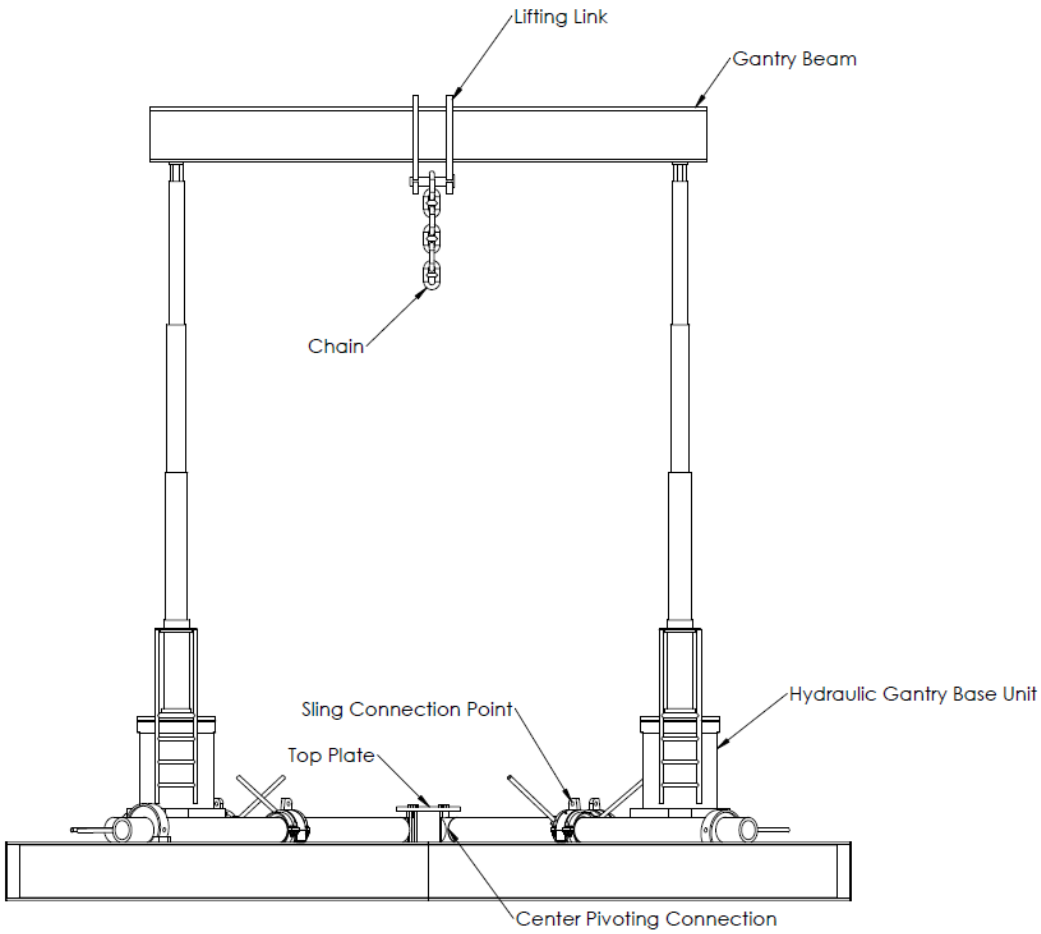

Figure 6

Refer to Figure 6. The Hydraulic Gantry Base Units provide stable bases for the hydraulic cylinder stages. A Gantry Beam, selected for the load to be lifted or in this case applied, is attached to the top of the Hydraulic Gantry Base Units. Standard Lifting Links, also sized based on the load, provide for a suspended connection. A Chain, sized to the load and about 5 feet long, is attached to the Lifting Links and is where the Hook and Load Cell would be suspended from. The Chain not only allows for the Hook to be at an ergonomic height when the Hydraulic Gantry is lowered, but also allows for visual confirmation that the sling is constructed and connected properly during testing. In addition, should a multi-leg sling break during testing, the chain's length will reduce potential side loads and provide ample time to stop the test before damage can occur to the UPL. Sling Connection Points that freely rotate to align with the sling connection are components of each Adjuster 42, identified in Figure 5. The Center Pivoting Connections are restrained by the Top Plate and Center Structure. These allow the Leg Tubes, seen in Figure 5, to rotate freely and carry axial and vertical loads.

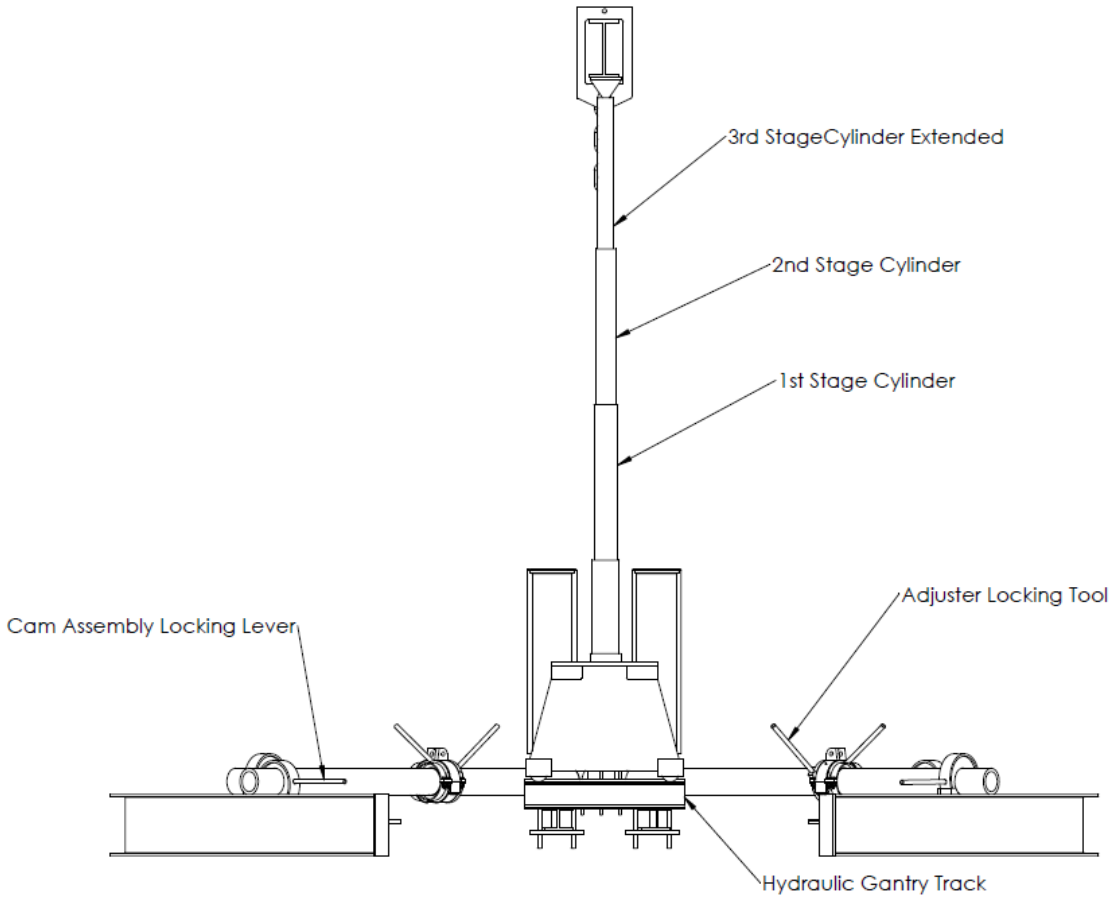

Figure 7

Refer to Figure 7. The Hydraulic Gantry Track, a component of a complete hydraulic gantry system, supports the Hydraulic Gantry Base Units, see Figure 6, and keeps the wheels aligned when the Hydraulic Gantry is moved. This movement is to be restricted in the UPL, but the tracks offer a pre-engineered solution to supporting the loads of the system. The Hydraulic Gantry Tracks transfer loads from the Structural Beams, seen in Figure 5, to the Hydraulic Gantry Base Units. This makes the system self-contained but for the loads carried by the Outer Ring, identified in Figure 5, which must be securely restrained to a foundation. The hydraulic gantry selected is a 3 stage, telescoping cylinder seen with the 3rd Stage Cylinder Extended. Cam Assembly Locking Levers allow the easy locking of the Leg Tubes, Figure 5, and transitioning between rolling and locked states. The Adjuster Locking Tool is a removable device that allow the operator to lock and unlock the Adjuster 42s once they are in place. Only one is required.

III. DETAILED DESIGN

1. Presentation of Structure (Sub-Systems)

A. Base Structure

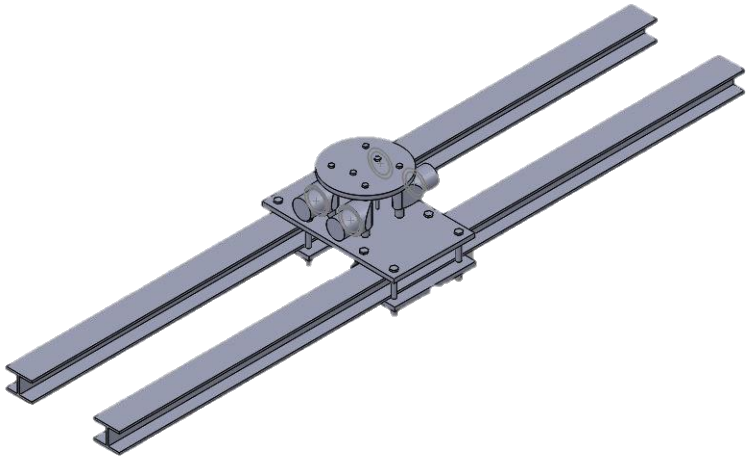

Figure 8

The center structure consists of several thick steel plates, tube adapters, I-beams, and bolts to tie it all together (Figure 7). The purpose of the center structure was to allow the proof loader to pull against itself, creating a contained system. A contained system allows the proof loader to depend on its own design, rather than making an assumption that some unknown factor, like the strength of the concrete, would resist the load applied by the gantries. The center structure also had to serve as the central hub to the legs of the proof loader, providing a place for them to connect and pivot. The tube adapters facilitated this, providing the connection between the center structure and the tubes, and providing the means for the tubes to pivot.

The center structure was broken down into several components: a top plate, middle plate, bottom plates, I-beams, tube adapters, and bolts (analysis available in appendix C). The top plate was to serve as a center connection for a 130,000 lb. capable pull, and the middle, bottom plates, and bolts served as means to transport that load down into the I-beams. The gantries sit on the I-beams, which were the basic idea behind the contained system concept. The I-beams transfer all applied loads back into the feet of the gantries, which puts the gantries in their ideal usage configuration.

B. Legs

The purpose of the four legs is to provide infinite connection points by the rotation of the legs and the radial movement of the adjusters. Almost all loads applied to the proof loader will be applied through the legs. Therefore, careful consideration was put into the analysis of the stresses from the axial, vertical, and lateral loads on the tubes, as well as the pressure exerted by the adjusters. After detailed analysis (found in Appendix A), it was decided that each of the four legs would be made of ASTM A519 grade 4130 SR Steel tubes, 12 inch outer and 9-inch inner diameter.

C. Cam Mechanism

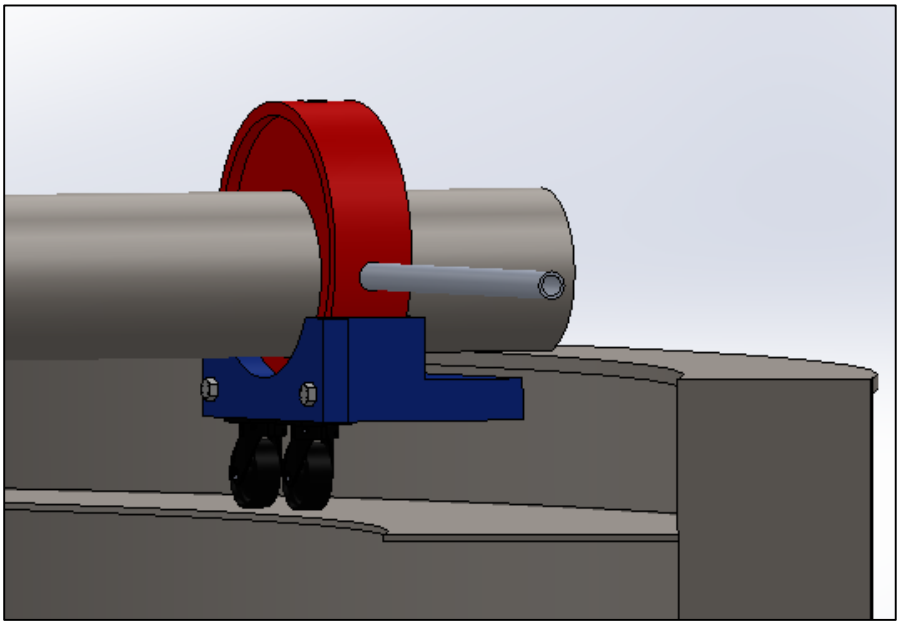

Figure 9

The cam mechanism, Figure 9, consists of one cam, lip front, lip back, and handle for each of the four legs. Images are available in Appendix D1. The purpose of the cam mechanism is to lock the legs in place once they are set to the noted angle. All vertical and lateral loads on the legs will be transferred to the cam mechanism. Detailed analysis of these loads on the mechanism can also be found in Appendix A. It was determined that the cam and lip front and back would be made of A36 Steel and that the handle would be made of Aluminum 6061-T6.

D. Adjuster 42

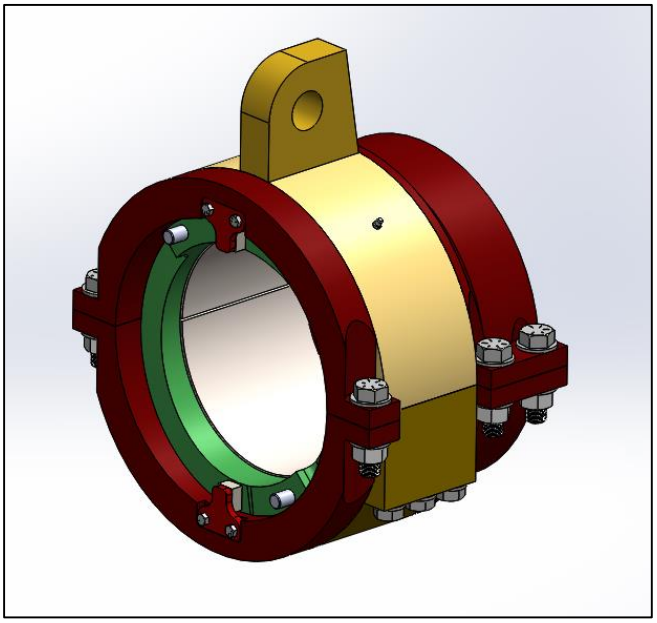

Figure 10

The Adjuster 42, Figure 10, is the connection point for the bottom sling connections and is positioned radially by sliding it along the Leg Tube. It rotates about the center connection when the Leg Tube is moved. The connection point is attached to a freely rotating loop that aligns with the sling leg as it is tightened. By using a wedge-collet and cone design, it can lock anywhere along the length of the Leg Tube and eliminates the need for pins and holes in the tube, increasing the tube's strength and allowing for infinite adjustability in positioning. A locking tool provides for positive locking once the position is set, and its clamping force increases with the axial load to resist sliding. A nonmetallic mallet may be used to unbind the collet wedge after testing. Drawings and detailed analysis of the Adjuster 42 and its components can be found in Appendix D2 and B respectively.

E. Adapters

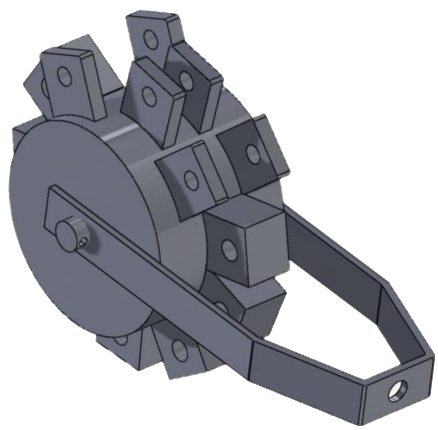

Figure 11

Adapters are made to facilitate the connection of the sling leg to the proof loader's adjuster. Not all slings will be able to connect directly to the adjuster, as some will have different end connections to connect to the part or the aircraft. One of these adapters is called the pin adapter (Figure 11), and the concept is a revolving wheel that hooks right to the main adjuster. The pin adapter serves as means to facilitate connecting the legs of the different pin connection slings to the proof loader. The revolving wheel-base would provide a surface on which many leg connections could be placed, and it would also always allow the sling to pull in line with the adjuster. This eliminates any side or skew loads on the adapter, and keeps everything in tension. Keeping all components in tension simplifies analysis, and allows for a simpler design.

Nearly every sling requires some sort of special adapter in order to be loaded, and this pin adapter serves as a means to consolidate some of them and make them easier to use. The sling ends that normally required pinned connections usually take the shape of either a forked prong or a singular tab that a pin slides through. Whatever the shape, the

pin adapter needs to sport the opposite to accommodate the sling end. During design of adapters for the proof loader, simplicity and ease of use was always the bottom line. In an effort to maintain simplicity, the team recommended stacking shackles to accommodate slings with shackle, hooks, and synthetic connection ends. We recommended stacking Crosby's G-2140 5, 7, and 18-ton shackles. These shackles all stack, and together cover the load entire range needed to proofload slings.

F. Gantry

The Lift Systems Model 22A was chosen as the key component for both adjusting the height of the UPL and applying loads. Details of the Model 22A can be seen in Figure 12 and Figure 13.

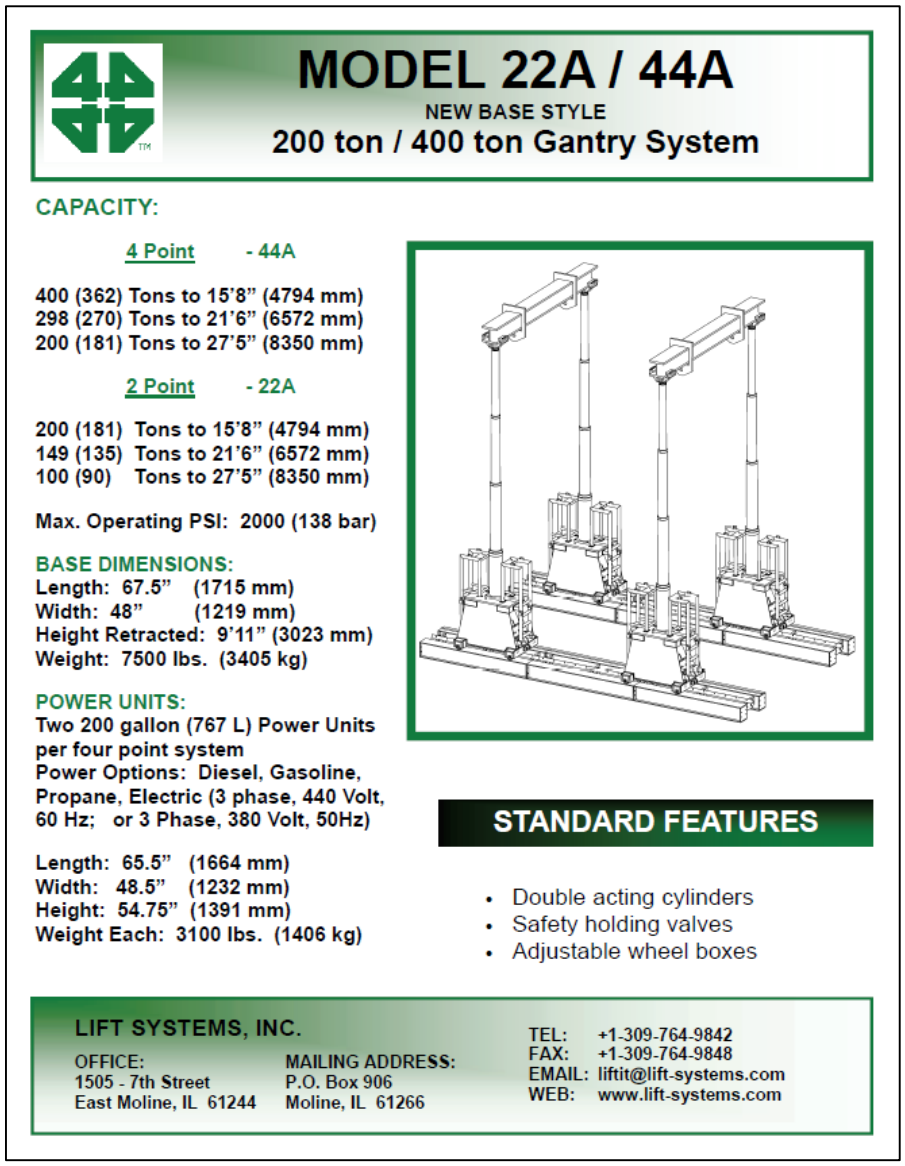

MODEL 22A / 44A
NEW BASE STYLE
200 ton / 400 ton Gantry System

CAPACITY:

4 Point - 44A

400 (362) Tons to 15'8" (4794 mm)
298 (270) Tons to 21'6" (6572 mm)
200 (181) Tons to 27'5" (8350 mm)

2 Point - 22A

200 (181) Tons to 15'8" (4794 mm)
149 (135) Tons to 21'6" (6572 mm)
100 (90) Tons to 27'5" (8350 mm)

Max. Operating PSI: 2000 (138 bar)

BASE DIMENSIONS:
Length: 67.5" (1715 mm)
Width: 48" (1219 mm)
Height Retracted: 9'11" (3023 mm)
Weight: 7500 lbs. (3405 kg)

POWER UNITS:
Two 200 gallon (767 L) Power Units per four point system
Power Options: Diesel, Gasoline, Propane, Electric (3 phase, 440 Volt, 60 Hz; or 3 Phase, 380 Volt, 50Hz)

Length: 65.5" (1664 mm)
Width: 48.5" (1232 mm)
Height: 54.75" (1391 mm)
Weight Each: 3100 lbs. (1406 kg)

STANDARD FEATURES

- Double acting cylinders
- Safety holding valves
- Adjustable wheel boxes

LIFT SYSTEMS, INC.
OFFICE:
1505 - 7th Street
East Moline, IL 61244
MAILING ADDRESS:
P.O. Box 906
Moline, IL 61266
TEL: +1-309-764-9842
FAX: +1-309-764-9848
EMAIL: liftit@lift-systems.com
WEB: www.lift-systems.com

Figure 12

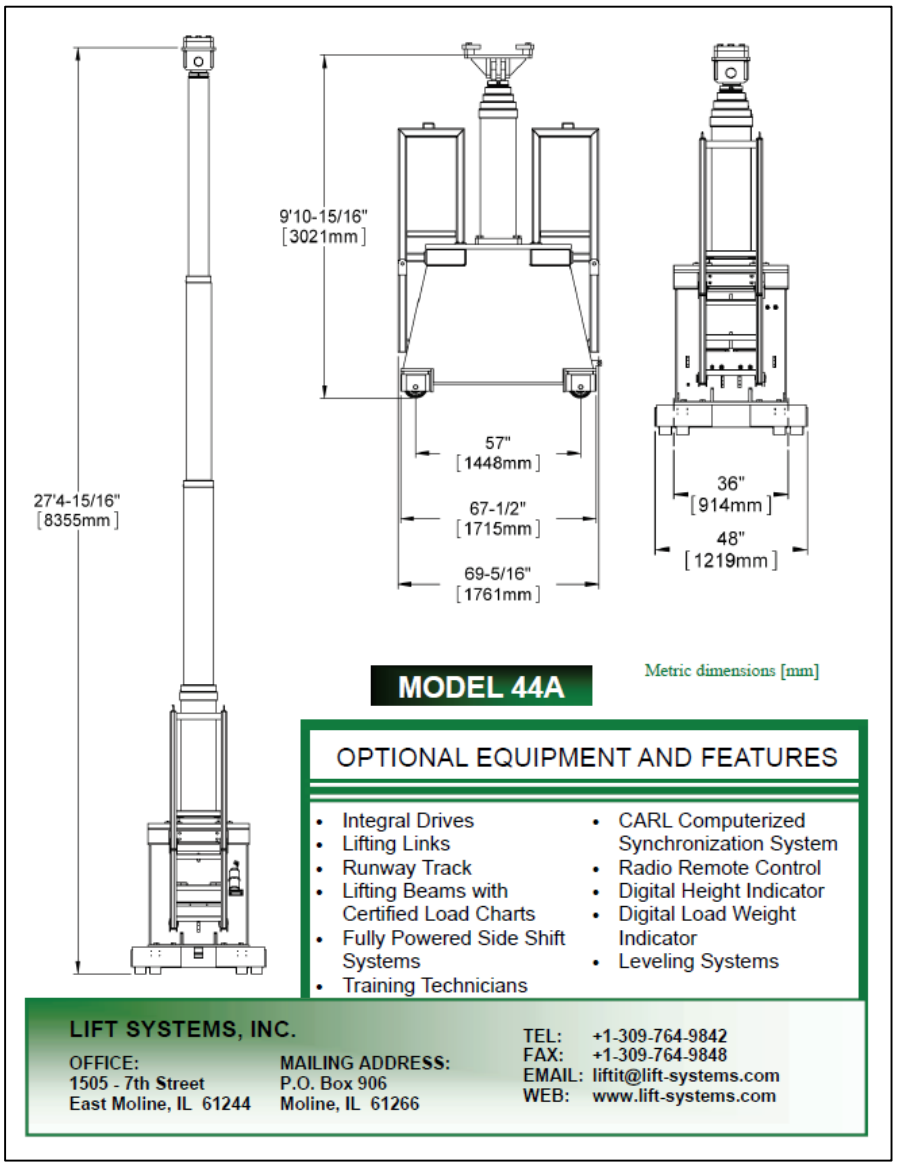
27'4-15/16"
[8355mm]
9'10-15/16"
[3021mm]
57"
[1448mm]
67-1/2"
[1715mm]
69-5/16"
[1761mm]
36"
[914mm]
48"
[1219mm]
MODEL 44A
Metric dimensions [mm]
OPTIONAL EQUIPMENT AND FEATURES
• Integral Drives
• Lifting Links
• Runway Track
• Lifting Beams with Certified Load Charts
• Fully Powered Side Shift Systems
• Training Technicians
• CARL Computerized Synchronization System
• Radio Remote Control
• Digital Height Indicator
• Digital Load Weight Indicator
• Leveling Systems
LIFT SYSTEMS, INC.
OFFICE:
1505 - 7th Street
East Moline, IL 61244
MAILING ADDRESS:
P.O. Box 906
Moline, IL 61266
TEL: +1-309-764-9842
FAX: +1-309-764-9848
EMAIL: liftit@lift-systems.com
WEB: www.lift-systems.com

Figure 13

G. Jib Crane

Figure 14

A Jib Crane with a 3-ton capacity and 15-foot reach was specified as the means to deliver the slings from transportation to the center of the UPL.

H. Safety

Figure 15

Safety was originally a very high priority, so a lot of analysis when into making sure the proof loader would be safe while it was testing slings. If something broke while prooftesting, the safety barrier was designed to stop debris from leaving the prooftest area. A large ring was designed to be suspended above the proof loader with four, one-foot-wide columns, and a sheet of chainmail was to be hung from the large ring on smaller rings, much like a shower curtain. The smaller rings would slide along the large ring with the aid of a small hand winch attached to one of the columns. The operator would be able to crank the winch, retract the curtain, move the sling into the center of the proof loader for testing, and then use another winch to draw the curtain shut. The safety

barrier was design to stop debris up to 1/8 inch in diameter, and could slow a 5 lb. object moving at 150 ft/s down to 1.3 ft/s. As an additional safety factor, the operator's control room would be housed in a brick building with a front panel of bulletproof glass. After our preliminary design presentation, the team was advised by our sponsors not to conduct any more analysis on the safety barrier, as it was believed too extreme for their needs.

I. Additional Components

There are additional components such as the outer ring and wheel plate sections, load cells, cabling, hydraulic power unit, hoses, foundations, etc. that are required for the complete system, but have been omitted from this report in order to focus on the detailed design of the critical components.

2. Design Components

Each component was designed with a safety factor of at least 5:1 for the ultimate allowable stress in the part, and 3:1 for the allowable yield stress in the part.

3. Design Optimization

Some designs needed to be optimized as analysis proceeded. The pin adapter was originally designed to work with every pinned sling that data could be found for. Because of this, the pin adapter needed to be made out of 4130, a very heavy, very dense steel, to handle the loads applied by some of the larger slings. The adapter was going to weigh over 100 lbs, and was going to take considerable machining to manufacture. To optimize the design, the larger load slings were removed from the adapter, and the material was changed from 4130 to Aluminum 2219. This decreased the weight from over 100 lbs to approximately 30 lbs, and machining time was decreased to a matter of days. Originally, the steel version needed to be machined all as one piece to maintain the strength needed for the high load slings. Once those high load slings were removed, there was no longer a need to machine the tabs as part of the adapter. All tabs could be machined independently and welded on with a simple filler weld (all analysis is available in appendix C).

4. Strength Analysis

Strength analysis needed to be performed on every piece of the proof loader. Each piece was designed with set safety factors, and every possible loading scenario was considered during design. Problems all the way from stresses from simple tensile loading to deflection stack up through joined parts and thread tear-out of tapped holes were considered. All final design analysis is available in appendices A-C.

5. Itemized Cost Estimate

An itemized cost estimate was produced using the best information available to the team. All labor costs are rough estimates based upon the size and complexity of the items. Many of the materials costs were based off single quotes or extrapolations from online price lists of similar but smaller stock material. It can be seen in Table 5.

UPL Cost

COMPONENT	PART	PN	UI	QTY	Price	Part Subtotal	Component Subtotal
LIFTING SYSTEM	LIFT SYSTEMS GANTRY 22A		EA	1	$125,000.00	$125,000.00	
	CHAIN		EA	1	$2,619.00	$2,619.00	
	SUM						$127,619.00
ADJUSTER-42	SHELL RAW MATERIAL		EA	8	$450.00	$3,600.00	
	LOOP RAW MATERIAL		EA	4	$1,800.00	$7,200.00	
	LOCKING RING RM		EA	4	$300.00	$1,200.00	
	COLLET-WEDGES RM		PR	4	$1,800.00	$7,200.00	
	HARDWARE		ST	4	$206.00	$824.00	
	LABOR		HR	200	$125.00	$25,000.00	
	SUM						$45,024.00
CAM MECHANISM	CAM - MATERIAL		EA	1	$3,000.00	$3,000.00	
	LIP - MATERIAL		EA	1	$2,000.00	$2,000.00	
	LABOR		HR	100	$125.00	$12,500.00	
	CASTER		EA	8	$100.00	$800.00	
	OD 2" x 0.25" x 48" TUBE		EA	4	$60.00	$240.00	
	SUM						$18,540.00
LEGS	TUBES		4 EA	1	$7,000.00	$7,000.00	
	COATING	TRACLON	EA	1	$2,000.00	$2,000.00	
	LABOR		HR	100	$125.00	$12,500.00	
	SUM						$21,500.00
LOAD MEASUREMENT	100-1K LOAD CELL	LC701-1K	EA	1	$625.00	$625.00	
	1K-10K LOAD CELL	LC702-10K	EA	1	$899.00	$899.00	
	5K-50K LOAD CELL	LC702-50K	EA	1	$899.00	$899.00	
	15K-150K LOAD CELL	LC702-150K	EA	1	$2,999.00	$2,999.00	
	DISPLAY UNIT	TOUGHBOOK	EA	1	$3,000.00	$3,000.00	
	CABLING AND CONNECTORS		AR	1	$1,500.00	$1,500.00	
	SUM						$9,922.00
CENTER STRUCTURE	TOP PLATE		EA	1	$400.00	$400.00	
	LABOR			10	$100.00	$1,000.00	
	MIDDLE PLATE		EA	1	$8,000.00	$8,000.00	
	LABOR			10	$100.00	$1,000.00	
	BOTTOM PLATE		EA	2	$1,800.00	$3,600.00	
	LABOR			5	$100.00	$500.00	
	BOLTS: 2"x20"		EA	8	$90.00	$720.00	
	NUTS AND WASHERS		EA	8	$42.00	$336.00	
	BOLTS: 1"x26"		EA	6	$70.00	$420.00	
	NUTS AND WASHERS		EA	6	$4.00	$24.00	
	IBEAM W12x190x26'		EA	2	$5,600.00	$11,200.00	
	TUBE ADAPTER		EA	4	$600.00	$2,400.00	
	LABOR			100	$100.00	$10,000.00	
	SUM						$39,600.00
PIN ADAPTER	CENTER ADAPTER		EA	1	$100.00	$100.00	
	LABOR			2	$100.00	$200.00	
	PIN		EA	1	$5.00	$5.00	
	LABOR			1	$100.00	$100.00	
	SUPPORT STRUCTURE		EA	1	$20.00	$20.00	
	LABOR			3	$100.00	$300.00	
TABS	INNER		EA	3	$7.00	$21.00	
	LABOR			5	$100.00	$500.00	
	OUTER		EA	18	$5.00	$90.00	
	LABOR			15	$100.00	$1,500.00	
	SUM						$2,836.00
TOTAL						$265,041.00	$265,041.00

THIS TOTAL DOES NOT INCLUDE, RING AND PILINGS, SITE PREP, FOUNDATION FOR UPL, ADAPTERS NOT LISTED, ADJUSTER WHEEL ASSY, SOFTWARE, INSTALLATION AND ASSEMBLY COSTS, BUT MAY OTHERWISE BE CONSIDERED AN ACCURATE ESTIMATE WHEN THE SCOPE OF KNOWLEDGE OF THE TEAM MEMBERS IS TAKEN INTO CONSIDERATION. (ADD A ZERO)

Table 5

IV. TEST PLAN

Refer to Table 3. Verification of design was conducted by inspection and analysis. If selected for construction, a detailed test plan for the system will need to be developed.

V. CONCLUSION AND FINAL RESULTS

The Universal Proof Loader (UPL) as detailed in this report and its appendices is a scalable, infinitely adjustable, reliable and safe design that fully satisfies the need presented to the team by FRC East in August of 2015.

The team learned the importance of research before design. Although the customer had presented a problem to the team, the team of experienced engineers from FRC East did not fully understand the need. Only by laborious research and cataloging of sling data, internet research and site visits was the team able to design a tool that fully satisfied the customer's need. Before this project, and the courses leading up to it, the team may have been tempted to take a problem at face value when presented by senior engineers.

As this team presented its initial brief to FRC East, it was essentially told that cost was not to be a determining factor when it came to basic capability. While the team kept this in mind, it also knew that to be good and ethical designers, that they had to be good stewards of their customer's money, no matter their customer's opinion. In addition, to be good stewards of the Earth's resources, the team made intelligent decisions in material selection, avoided wasteful oversizing of components, and avoided designs that had single use components.

VI. REFERENCES

Lift Systems | Home. (n.d.). Retrieved April 30, 2016, from http://www.lift-systems.com/

Load Cells, Force Sensors and Torque Transducers. (n.d.). Retrieved April 30, 2016, from http://www.omega.com/section/load-cells-force-sensors-torque.html

Machinery's handbook 28. (2008). New York, NYU: Industrial Press.

Shigley's Mechanical Engineering Design. (2013). McGraw-Hill Science Engineering.

Welcome to Chant Engineering. (n.d.). Retrieved April 30, 2016, from http://www.chantengineering.com/

Roark's Formulas For Stress and Strain. (2002). New York : McGraw-Hill.

VII. APPENDICES

1. APPENDIX A (Brenda's Analysis)

Applied Forces:

- R_a = 39,314lbs at 56.15° from x axis

Applied Pressure:

- 1061 psi inside contact with adjuster

Reactions:

- $R_{i,x}$:applied at contact with inner fitting
- $R_{i,y}$:applied at contact with inner fitting
- $R_{o,x}$:applied at contact with cam
- $R_{o,y}$:applied at contact with cam

Moments: Calculated about origin

$$\sum_{Fx} = R_{a,x} + R_{i,x} + R_{o,x} = 0$$
$$\sum_{Fy} = R_{a,y} + R_{i,y} + R_{o,y} = 0$$
$$\sum_{Fz} = 0$$
$$\sum_{Mx} = R_{i,y} * \frac{L}{2} + R_{o,y} * \frac{L}{2} = 0$$
$$\sum_{My} = R_{i,x} * \frac{L}{2} + R_{o,x} * \frac{L}{2} = 0$$
$$\sum_{Mz} = 0$$

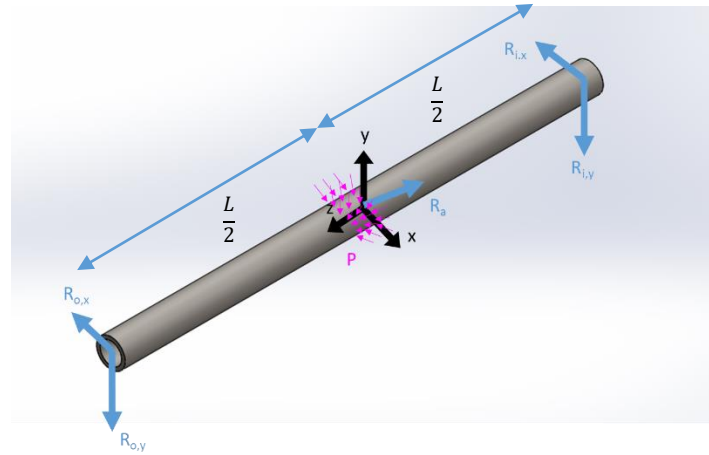

Assumptions:

- Adjuster is centered along the length of the pipe
- All bodies are rigid.
- Origin is located at the center of the pipe.

Solution:

$R_{a,x}$=21,800lbs, $R_{a,y}$=32,500lbs, L=210”

Substituting,

$$\sum_{Fx} = 21800 + R_{i,x} + R_{o,x} = 0$$
$$\sum_{Fy} = 32500 + R_{i,y} + R_{o,y} = 0$$
$$\sum_{Mx} = R_{i,y} * 105 + R_{o,y} * 105 = 0$$
$$\sum_{My} = R_{i,x} * 105 + R_{o,x} * 105 = 0$$

Solving the previous system of equations,

$R_{i,x}$=10,900lbs, $R_{i,y}$=16,250lbs, $R_{o,x}$=10,900lbs, $R_{o,y}$=16,250lbs

Applied Forces:

- R_a=39134lbs at 56.15° from x axis

Reactions:

- R_{cp}:applied at contact with cam

Moments: Calculated about origin

$$\sum_{Fx} = R_{a,x} + R_{cp,x} = 0$$
$$\sum_{Fy} = R_{a,y} + R_{cp,y} = 0$$
$$\sum_{Fz} = 0$$
$$\sum_{Mx} = 0$$
$$\sum_{My} = 0$$
$$\sum_{Mz} = 0$$

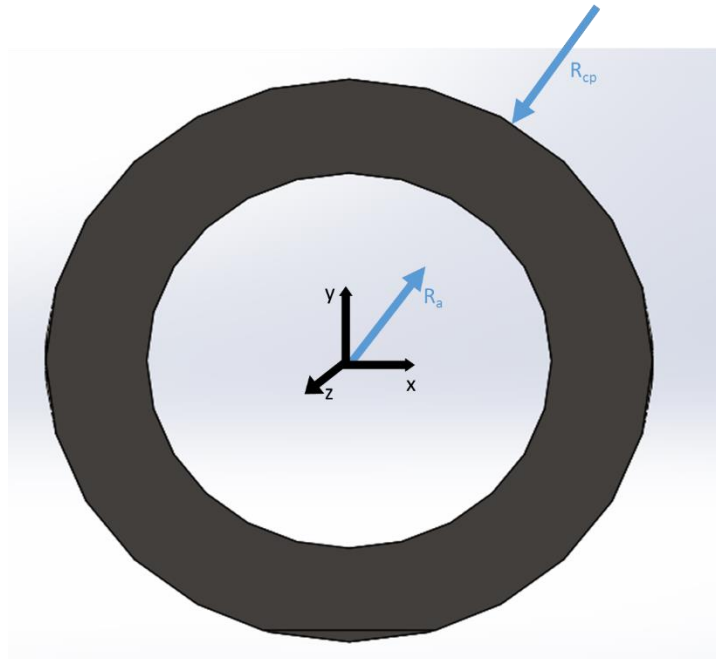

Assumptions:

- Adjuster is at the outer end of the pipe.
- All bodies are rigid.
- Origin is located at the center of the pipe.

Solution:

$R_{a,x}$=21,800lbs, $R_{a,y}$=32,500lbs

Substituting,

$$\sum_{Fx} = 21800 + R_{cp,x} = 0$$

$$\sum_{Fy} = 32500 + R_{cp,y} = 0$$

$R_{cp,x}$=-21800, $R_{cp,y}$=-32500

Therefore,

R_{cp}=39134lbs at 186.15° from x axis

Applied Forces:

- R_{cp} = 39,314.3lbs at 56.15° from x axis

Reactions:

- R_{cl}:applied normal to contact with lip
- F_{rf}:applied tangent to contact with lip

Moments: Calculated about origin

$$\sum_{Fx} = R_{cp,x} + R_{cl,x} + F_{rf,x} = 0$$
$$\sum_{Fy} = R_{cp,y} + R_{cl,y} + F_{rf,y} = 0$$
$$\sum_{Fz} = 0$$
$$\sum_{Mx} = 0$$
$$\sum_{My} = 0$$
$$\sum_{Mz} = R_{cl} * d_1 + F_{rf} * d_2 = 0$$

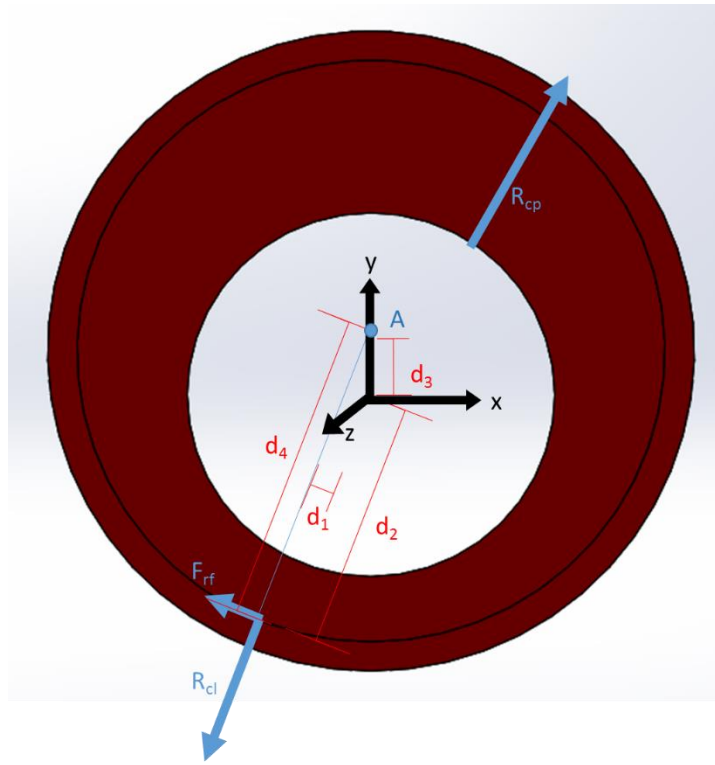

Assumptions:

- All bodies are rigid.
- Origin is located at the center of the pipe opening.

Solution:

$R_{cp,x}$=21,800lbs, $R_{cp,y}$=32,500lbs

Because R_{cl} is a normal force, it must go through point A (the center of the circles defining the outer edge). Since F_{rf} is its related frictional force, the two must be perpendicular. Therefore,

$R_{cl,x}=R_{cl}*\cos(\theta)$, $R_{cl,y}= R_{cl}*\sin(\theta)$, $F_{rf,x}=F_{rf}*\cos(\theta-90)$, $F_{rf,y}=F_{rf}*\sin(\theta-90)$

$d_1=d_3*\sin(270-\theta)$, $d_2=d_4-d_3*\cos(270-\theta)$, d_3=1.5”, d_4=10”

With θ being the angle between the x-axis and R_{cl}.

Substituting,

$$\sum_{Fx} = 21{,}800 + R_{cl}\cos(\theta) + F_{rf}\cos(\theta - 90) = 0$$
$$\sum_{Fy} = 32{,}500 + R_{cl}\sin(\theta) + F_{rf}\sin(\theta - 90) = 0$$
$$\sum_{Mz} = R_{cl} * 1.5\sin(270 - \theta) - F_{rf} * (10 - 1.5\cos(270 - \theta)) = 0$$

Solving the previous system of equations,

R_{cl}=38997.4, F_{rf}=3270, θ=240.94

Therefore,

R_{cl} = 38,997lbs at 240.94° from x axis and F_{rf} = 3270lbs at 150.94° from x axis

Applied Forces:

- R_{cl} = 38,997lbs at 60.94° from x axis applied at contact with cam
- F_{rf} = 3,270lbs at 330.94° from x-axis applied at contact with cam

Reactions:

- N:applied normal to contact with flange
- F_f:applied along contact with flange

Moments: Calculated about origin

$$\sum_{Fx} = R_{cl,x} + F_{rf,x} + F_f = 0$$
$$\sum_{Fy} = R_{cl,y} + F_{rf,y} + N = 0$$
$$\sum_{Fz} = 0$$
$$\sum_{Mx} = 0$$
$$\sum_{My} = 0$$
$$\sum_{Mz} = -F_{rf} * d_1 + F_f * d_2 + N * d_3 = 0$$

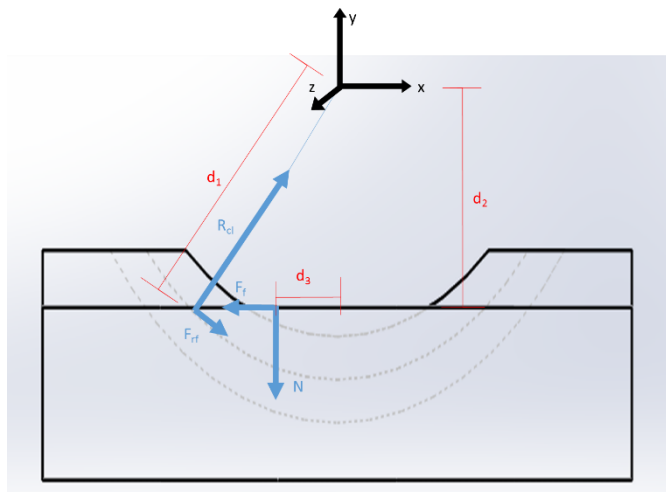

Assumptions:

- All bodies are rigid.
- Origin is located at the center of the cam mating surfaces.

Solution:

d_1=10”, d_2=8.25”

$R_{cl,x}$=18941, $R_{cl,y}$=34088, $F_{rf,x}$=2858, $F_{rf,y}$=-1588, F_{rf}=3270

Substituting,

$$\sum_{Fx} = 18941 + 2858 + F_f = 0$$
$$\sum_{Fy} = 34088 + -1588 + N = 0$$

N=32,500lbs

F_f=21,800lbs

$$\sum_{Mz} = -3270 * 10 + 21800 * 8.25 + 32500 * d_3 = 0$$

d_3=4.53”

Therefore,

N = 32,500lbs at 270° from x axis and x=-4.53”

F_f = 21,800lbs at 180° from x axis

Applied Forces:

- R_{pipe} applied at contact with pipe
- R_{lip} applied at contact with pipe
- $F_{rf,pipe,max}$ applied at contact with lip
- $F_{rf,lip,max}$ applied at contact with lip

Reactions:

- $F_{operator}$: applied at end of handle

Moments: Calculated about origin

$$\sum_{Mz}: F_{operator} * d \geq F_{rf,pipe,max} * d_1 + F_{rf,lip,max} * d_2$$

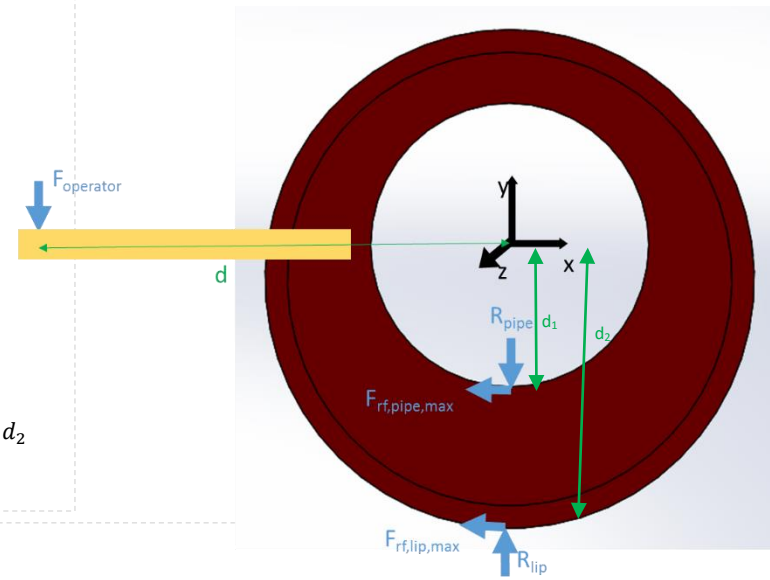

Assumptions:

- All bodies are rigid.
- Cam and handle are one body.
- Origin is located at the center of the pipe opening.

Solution:

$$F_{operator} * d \geq F_{rf,pipe,max} * d_1 + F_{rf,lip,max} * d_2$$

$$R_{pipe} = .5W_{pipe} + W_{adjuster}$$

$$R_{lip} = .5W_{pipe} + W_{adjuster+}W_{cam}$$

$$F_{rf,pipe,max} = \mu * R_{pipe}$$

$$F_{rf,lip,max} = \mu * R_{lip}$$

d_1=6”, d_2=12.5”, W_{pipe}=2941lbs, $W_{adjuster}$=600lbs, W_{cam}=323lbs, μ=.1 for “Chrome Plus”

Substituting,

$$R_{pipe} = .5 * 2941 + 600 = 2070.5$$

$$R_{lip} = .5 * 2941 + 600 + 323 = 2393.5$$

$$F_{rf,pipe,max} = .1 * 2070.5 = 207lbs$$

$$F_{rf,lip,max} = .1 * 2393.5 = 240lbs$$

$$F_{operater} * d = 207 * 6 + 240 * 12.5 = 4242inlbs$$

Assuming $F_{operator}$=100 lbs,

d ≥ 42.42”

L = d-7 = 36”

Applied Forces:

- F = 100lbs applied at the outer end of the handle

Reactions:

- R_1:applied at outer edge of cam
- R_2:applied at inner end of handle

Moments: Calculated about origin

$$\sum_{Fx} = 0$$
$$\sum_{Fy} = R_1 - F - R_2 = 0$$
$$\sum_{Fz} = 0$$
$$\sum_{Mx} = 0$$
$$\sum_{My} = 0$$
$$\sum_{Mz} = R_1 * d_1 + R_2 * (d_1 + d_2) = 0$$

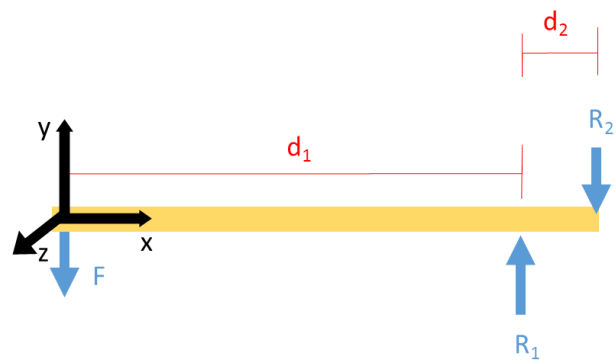

Assumptions:

- All bodies are rigid.
- Origin is located at the outer end of the handle.

Solution:

F=80lbs

d_1=32”, d_2=4”

Substituting,

$$\sum_{Fy} = R_1 - 100 - R_2 = 0$$
$$\sum_{Mz} = R_1 * 32 - R_2 * (36) = 0$$

Solving the previous system of equations,

R_1=900lbs

R_2=800lbs

Applied Forces:

- $R_{a,x}$ = 21800lbs along x axis applied at contact with adjuster
- $R_{a,y}$ = 32500lbs along y axis applied at contact with adjuster
- $R_{a,z}$ = 40000lbs along –z axis applied at contact with adjuster

Applied Pressure:

- 1061 psi inside contact with adjuster

Material: ASTM A519 Grade 4130 SR

Yield Strength (YS)	85,000 psi
Ultimate Strength (US)	105,000 psi
Modulus of Elasticity (E)	29,700,000 psi

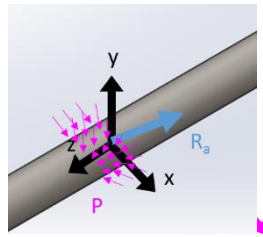

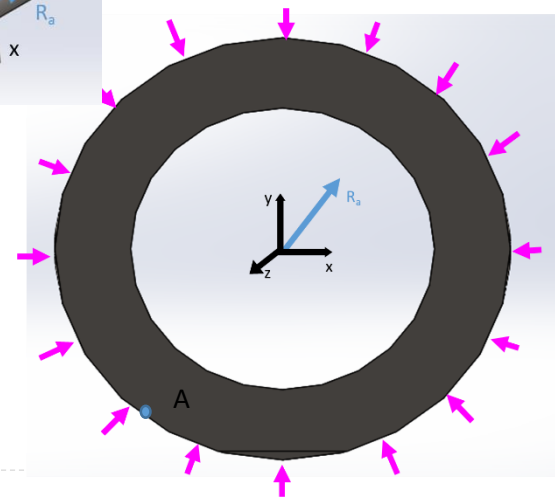

Solution:

Normal Bending Stress:

$$\sigma_{max,bending} = \frac{Mc}{I}$$

$$M = \frac{F_{xy} * (-L)}{4}$$

$$I = \frac{\pi r_o^4}{4} - \frac{\pi r_i^4}{4}$$

$$F_{xy} = \sqrt{R_{a,x} + R_{a,y}}$$

r_o=6”, r_i=4.5”, c=6”, L=210”

Substituting,

$$F_{xy} = \sqrt{21{,}800 + 32{,}500} = 39{,}134 lbs$$

$$M = \frac{39{,}134 * (-210)}{4} = -2054535$$

$$I = \frac{\pi 6^4}{4} - \frac{\pi 4.5^4}{4} = 695.81$$

$$\sigma_{max,bending} = \frac{-2054535 * 6}{695.81} = -17{,}716.3 psi$$

Shear Stress:

$$\tau_{avg} = \frac{F_{xy}}{A}$$

$$A = \pi r_o^2 - \pi r_i^2$$

Shear Stress, continued:

Substituting,

$$A = \pi 6^2 - \pi 4.5^2 = 49.48$$

$$\tau_{avg} = \frac{39134}{49.48} = 790.9psi$$

Axial Stress:

$$\sigma_{axial} = \frac{F_z}{A}$$

$$A = \pi r_o^2 - \pi r_i^2$$

F_z = -40,000lbs

Substituting,

$$A = \pi 6^2 - \pi 4.5^2 = 49.48$$

$$\sigma_{axial} = \frac{-40000}{49.48} = -808.4psi$$

Pressure Stress (formulas from Shigley's pg 113):

$$\sigma_t = \frac{p_i r_i^2 - p_o r_o^2 - r_i^2 r_o^2 \frac{p_o - p_i}{r^2}}{r_o^2 - r_i^2}$$

$$\sigma_r = \frac{p_i r_i^2 - p_o r_o^2 + r_i^2 r_o^2 \frac{p_o - p_i}{r^2}}{r_o^2 - r_i^2}$$

p_i=0, p_o=1061psi, r=6

Substituting,

$$\sigma_t = \frac{1061 * 6^2 - 4.5^2 6^2 \frac{1061}{6^2}}{6^2 - 4.5^2} = 3789.29$$

$$\sigma_r = \frac{1061 * 6^2 + 4.5^2 6^2 \frac{1061}{6^2}}{6^2 - 4.5^2} = 1061$$

Von Mises Stress at Point A (formula from Shigley's pg 223):

$$\sigma_{vonmises} = \frac{1}{\sqrt{2}}[(\sigma_a - \sigma_t)^2 + (\sigma_t - \sigma_r)^2 + (\sigma_r - \sigma_a)^2 + 6({\tau_{at}}^2 + {\tau_{tr}}^2 + {\tau_{ra}}^2)]^{\frac{1}{2}}$$

$$\sigma_a = \sigma_{max,bending} + \sigma_{axial}$$

$$\sigma_t = \sigma_t$$

Von Mises Stress at Point A, continued:

$$\sigma_r = \sigma_r$$

$$\tau_{at} = \tau_{max}$$

$$\tau_{tr} = 0$$

$$\tau_{ra} = 0$$

Substituting,

$$\sigma_a = -17{,}716.3 + -808.4 = -18524.7psi$$

$$\sigma_t = -3789.29psi$$

$$\sigma_r = -1061psi$$

$$\tau_{at} = 790.9psi$$

$$\tau_{tr} = 0$$

$$\tau_{ra} = 0$$

$$\sigma_{vonmises} = \frac{1}{\sqrt{2}}[(-18524.7 - -3789.29)^2 + (-3789.29 - -1061)^2 + (-1061 - -18524.7)^2 + 6(709.9^2)]^{\frac{1}{2}} = 16272psi$$

$$FoS_{yield} = \frac{58{,}000}{16272} = 3.6$$

$$FoS_{ultimate} = \frac{85{,}000}{16272} = 5.2$$

Additional Information:

Applied Forces:

- R_a = 39,134lbs at 56.15° from x axis
- R_{cp} = 39,134lbs at 236.15° from x axis

Material: ASTM A519 Grade 4130 SR

Yield Strength (YS)	85,000 psi
Ultimate Strength (US)	105,000 psi
Modulus of Elasticity (E)	29,700,000 psi

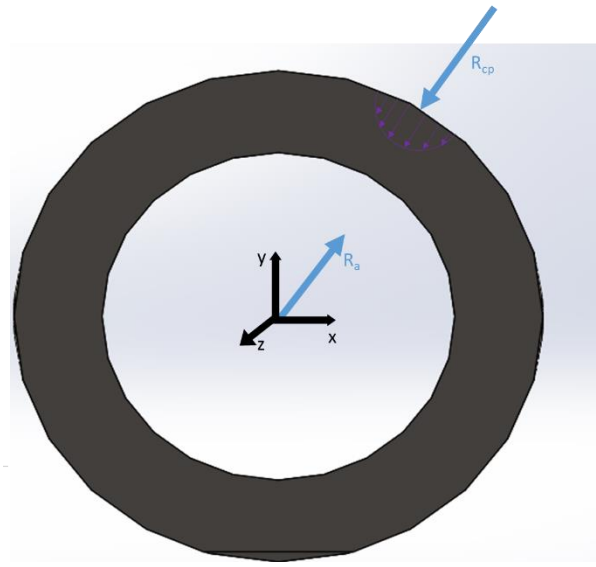

Solution:

Contact/Bearing Stress from R_{cp} (formulas from Roark pg 703):

$$\sigma_{max} = 0.591\sqrt{\frac{p * E}{K_D}}$$

$$b = 2.15\sqrt{\frac{p * K_D}{E}}$$

$$p = \frac{Force}{length}$$

$$K_D = \frac{D_1 * D_2}{D_1 - D_2}$$

Force=38997lbs, Length=2”, D_1=20”, D_2=19.9375”

Substituting,

$$p = \frac{38997}{2} = 19498.5\frac{lbs}{in}$$

$$K_D = \frac{20 * 19.9375}{20 - 19.9375} = 6380in$$

$$\sigma_{max} = 0.591\sqrt{\frac{19498.5 * 29{,}700{,}000}{6380}} = 5630.62psi$$

$$b = 2.15\sqrt{\frac{19498.5 * 6380}{29{,}700{,}000}} = 4.4"$$

$$FoS_{yield} = \frac{85{,}000}{5630} = 15.1$$

$$FoS_{ultimate} = \frac{105{,}000}{5630} = 18.7$$

Additional Information:

Applied Forces:

- R_{cp} = 39,314lbs at 56.15° from x axis applied at contact with pipe
- R_{cl} = 38997 lbs at 240.94° from x axis applied at contact with lip
- F_{rf} = 3270 lbs at 150.94° from x axis applied at contact with lip

Material: A36

Yield Strength (YS)	36,000 psi
Ultimate Strength (US)	58,000 psi
Modulus of Elasticity (E)	29,000,000 psi

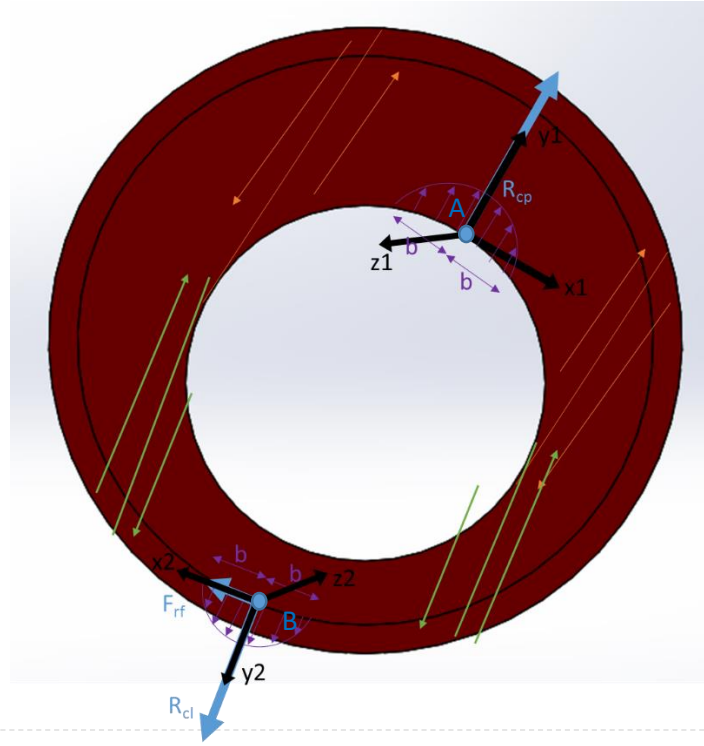

Solution:

Contact/Bearing Stress from R_{cp} (Formulas from Roark pg 703):

$$\sigma_{max} = 0.591\sqrt{\frac{p * E}{K_D}}$$

$$b = 2.15\sqrt{\frac{p * K_D}{E}}$$

$$p = \frac{Force}{length}$$

$$K_D = \frac{D_1 * D_2}{D_1 - D_2}$$

Force=39134lbs, Length=4”, D_1=12.125”, D_2=12”

Substituting,

$$p = \frac{39134}{4} = 9783.5\frac{lbs}{in}$$

$$K_D = \frac{12.125 * 12}{12.125 - 12} = 1164in$$

$$\sigma_{max} = 0.591\sqrt{\frac{9783.5 * 29{,}000{,}000}{1164}} = 9226psi$$

$$b = 2.15\sqrt{\frac{9783.5 * 1164}{29{,}000{,}000}} = 1.35"$$

Shear (tearout) Stress from R_{cp}:

$$\tau_{avg} = \frac{F}{A}$$

Substituting (lengths coming from Solidworks model),

$$\tau_{avg} = \frac{39134lbs}{4in * 7.48in + 4in * 8.47in} = 613psi$$

Von Mises Stress at Point A (Formula from Shigley's pg 223):

$$\sigma_{vonmises} = \frac{1}{\sqrt{2}}\left[(\sigma_{x1} - \sigma_{y1})^2 + (\sigma_{y1} - \sigma_{z1})^2 + (\sigma_{z1} - \sigma_{x1})^2 + 6({\tau_{x1y1}}^2 + {\tau_{y1z1}}^2 + {\tau_{z1x1}}^2)\right]^{\frac{1}{2}}$$

$$\sigma_{x1} = 0$$

$$\sigma_{y1} = \sigma_{max}$$

$$\sigma_{z1} = 0$$

$$\tau_{x1y1} = \tau_{avg}$$

$$\tau_{y1z1} = 0$$

$$\tau_{z1x1} = 0$$

Substituting,

$$\sigma_{x1} = 0$$

$$\sigma_{y1} = 9226psi$$

$$\sigma_{z1} = 0$$

$$\tau_{x1y1} = 613psi$$

$$\tau_{y1z1} = 0$$

$$\tau_{z1x1} = 0$$

$$\sigma_{vonmises,a} = \frac{1}{\sqrt{2}}[(-9226)^2 + (9226)^2 + 6(613^2)]^{\frac{1}{2}} = 9286$$

$$FoS_{yield} = \frac{36{,}000}{9286} = 3.9$$

$$FoS_{ultimate} = \frac{58{,}000}{9286} = 6.2$$

Contact/Bearing Stress from R_{cl} (Formulas from Roark pg 703):

$$\sigma_{max} = 0.591\sqrt{\frac{p * E}{K_D}}$$

A-13

$$b = 2.15\sqrt{\frac{p * K_D}{E}}$$

$$p = \frac{Force}{length}$$

$$K_D = \frac{D_1 * D_2}{D_1 - D_2}$$

Force=38997lbs, Length=2", D_1=20", D_2=19.9375"

Substituting,

$$p = \frac{38997}{2} = 19498.5\frac{lbs}{in}$$

$$K_D = \frac{20 * 19.9375}{20 - 19.9375} = 6380in$$

$$\sigma_{max} = 0.591\sqrt{\frac{19498.5 * 29{,}000{,}000}{6380}} = 5564psi$$

$$b = 2.15\sqrt{\frac{19498.5 * 6380}{29{,}000{,}000}} = 4.45"$$

Shear (tearout) Stress from R_{cl}:

$$\tau_{avg} = \frac{F}{A}$$

Substituting (lengths coming from Solidworks model),

$$\tau_{avg} = \frac{38997lbs}{4in * 9.96in + 4in * 10.93in} = 467psi$$

Von Mises Stress at Point B (Formula from Shigley's pg 223):

$$\sigma_{vonmises} = \frac{1}{\sqrt{2}}\left[(\sigma_{x2} - \sigma_{y2})^2 + (\sigma_{y2} - \sigma_{z2})^2 + (\sigma_{z2} - \sigma_{x2})^2 + 6({\tau_{x2y2}}^2 + {\tau_{y2z2}}^2 + {\tau_{z2x2}}^2)\right]^{\frac{1}{2}}$$

$$\sigma_{x2} = 0$$

$$\sigma_{y2} = \sigma_{max}$$

$$\sigma_{z2} = 0$$

Von Mises Stress at Point B, continued:

$$\tau_{x2y2} = \tau_{avg}$$

$$\tau_{y2z2} = 0$$

$$\tau_{z2x2} = 0$$

Substituting,

$$\sigma_{x2} = 0$$

$$\sigma_{y2} = 5564psi$$

$$\sigma_{z2} = 0$$

$$\tau_{x2y2} = 467$$

$$\tau_{y2z2} = 0$$

$$\tau_{z2x2} = 0$$

$$\sigma_{vonmises} = \frac{1}{\sqrt{2}}[(-5564)^2 + (5564)^2 + 6(467^2)]^{\frac{1}{2}} = 5620$$

$$FoS_{yield} = \frac{36{,}000}{5620} = 6.4$$

$$FoS_{ultimate} = \frac{58{,}000}{5620} = 10.3$$

Additional Information:

Applied Forces:

- R_{cl} = 38997 lbs at 60.94° from x axis
- F_{rf} = 3270 lbs at 330.94° from x axis
- F_f = 21,800 lbs at 180° from x axis (x=-4.53" z=5")
- N = 32,500 lbs at 270° from x axis (x=-4.53" z=5")

Material: A36

Yield Strength (YS)	36,000 psi
Ultimate Strength (US)	58,000 psi
Modulus of Elasticity (E)	29,000,000 psi

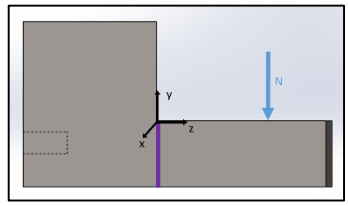

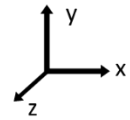

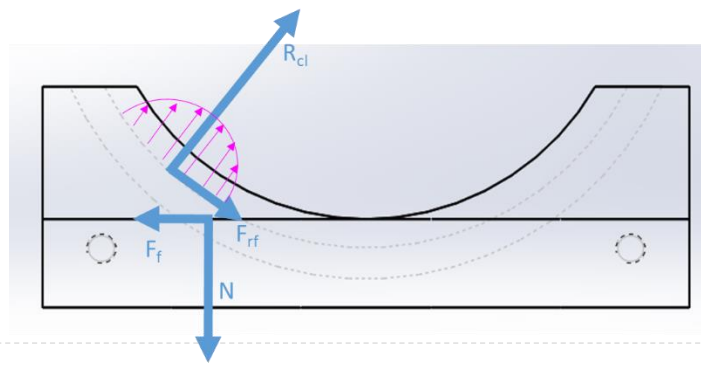

Solution:

Contact/Bearing Stress from R_{cl} (Formulas from Roark pg 703):

$$\sigma_{max} = 0.591\sqrt{\frac{p * E}{K_D}}$$

$$b = 2.15\sqrt{\frac{p * K_D}{E}}$$

$$p = \frac{Force}{length}$$

$$K_D = \frac{D_1 * D_2}{D_1 - D_2}$$

Force = 38997 lbs, Length = 2", D_1 = 20", D_2 = 19.9375"

Substituting,

$$p = \frac{38997}{2} = 19498.5\frac{lbs}{in}$$

$$K_D = \frac{20 * 19.9375}{20 - 19.9375} = 6380in$$

$$\sigma_{max} = 0.591\sqrt{\frac{19498.5 * 29{,}000{,}000}{6380}} = 5564psi$$

$$b = 2.15\sqrt{\frac{19498.5 * 6380}{29{,}000{,}000}} = 4.45"$$

Shear Stress from R_{cl}:

$$\tau_{avg} = \frac{F}{A}$$

Substituting (dimensions taken from Solidworks model),

$$\tau_{avg} = \frac{38997lbs}{2 * 19.78in^2} = 986psi$$

Von Mises Stress at Point A:

$$\sigma_{vonmises} = \frac{1}{\sqrt{2}}\left[(\sigma_{x'} - \sigma_{y'})^2 + (\sigma_{y'} - \sigma_z)^2 + (\sigma_z - \sigma_{x'})^2 + 6({\tau_{x'y'}}^2 + {\tau_{y'z}}^2 + {\tau_{zx'}}^2)\right]^{\frac{1}{2}}$$

$$\sigma_{x'} = 0$$

$$\sigma_{y'} = \sigma_{max}$$

$$\sigma_{z'} = 0$$

$$\tau_{x'y'} = \tau_{avg}$$

$$\tau_{y'z} = 0$$

$$\tau_{zx'} = 0$$

Substituting,

$$\sigma_{x'} = 0$$

$$\sigma_{y'} = 5564$$

$$\sigma_{z'} = 0$$

$$\tau_{x'y'} = 986$$

$$\tau_{y'z} = 0$$

$$\tau_{zx'} = 0$$

$$\sigma_{vonmises} = \frac{1}{\sqrt{2}}[(-5564)^2 + (5564)^2 + 6(986^2)]^{\frac{1}{2}} = 5820$$

$$FoS_{yield} = \frac{36,000}{5820} = 6.2$$

$$FoS_{ultimate} = \frac{58,000}{5820} = 9.9$$

Bending Stress from N:

$$\sigma_{max} = \frac{Mc}{I}$$

$$M = Fd$$

$$c = \frac{h}{2}$$

$$I = \frac{bh^3}{12}$$

F = N = 32,500 lbs , b = 22”, h = 3”, d=5”

Substituting,

$$I = \frac{22 * 3^3}{12} = 49.5\ in^4$$

$$c = \frac{3}{2} = 1.5\ in$$

$$M = 32{,}500 * 5 = 162{,}500$$

$$\sigma_{max} = \frac{162{,}500 * 1.5}{49.5} = 4924\ psi$$

Shear Stress from N:

$$\tau_{avg} = \frac{F}{A}$$

F = N = 32,500 lbs, A = 22*3 = 66 in^2

Substituting,

$$\tau_{avg} = \frac{32{,}500}{66} = 492\ psi$$

Von Mises Stress at Point B:

$$\sigma_{vonmises} = \frac{1}{\sqrt{2}}\left[(\sigma_x - \sigma_y)^2 + (\sigma_y - \sigma_z)^2 + (\sigma_z - \sigma_x)^2 + 6({\tau_{xy}}^2 + {\tau_{yz}}^2 + {\tau_{zx}}^2)\right]^{\frac{1}{2}}$$

$$\sigma_x = 0$$

$$\sigma_y = 0$$

$$\sigma_z = \sigma_{max}$$

$$\tau_{xy} = \tau_{avg}$$

$$\tau_{yz} = 0$$

$$\tau_{zx} = 0$$

Von Mises Stress at Point B, continued:

Substituting,

$$\sigma_x = 0$$

$$\sigma_y = 0$$

$$\sigma_z = 4924psi$$

$$\tau_{xy} = 492\ psi$$

$$\tau_{yz} = 0$$

$$\tau_{zx} = 0$$

$$\sigma_{vonmises} = \frac{1}{\sqrt{2}}[(-4924)^2 + (4924)^2 + 6(492^2)]^{\frac{1}{2}} = 4997$$

$$FoS_{yield} = \frac{36{,}000}{4997} = 7.2$$

$$FoS_{ultimate} = \frac{58{,}000}{4997} = 11.6$$

Stress at Point C: Contact Stress from N:

$$\sigma_{avg} = \frac{F}{A}$$

F = N = 32,500 lbs, A =6*22=132 (taken from Solidworks model)

Substituting,

$$\sigma_{avg} = \frac{32{,}500}{132} = 246psi$$

$$FoS_{yield} = \frac{36{,}000}{246} = 146$$

$$FoS_{ultimate} = \frac{58{,}000}{246} = 236$$

Additional Information:

Applied Forces:

- R_{pipe} = 2970.5 lbs at 270° from x axis
- R_{lip} = 2393.5lbs at 90° from x axis
- $F_{rf,pipe,max}$ = 207lbs at 180° from x axis
- $F_{rf,lip,max}$ = 240lbs at 180° from x axis
- R_1 = 900lbs at 270° from x axis
- R_2 = 800lbs at 90° from x axis

Material: A36

Yield Strength (YS)	36,000 psi
Ultimate Strength (US)	58,000 psi
Modulus of Elasticity (E)	29,000,000 psi

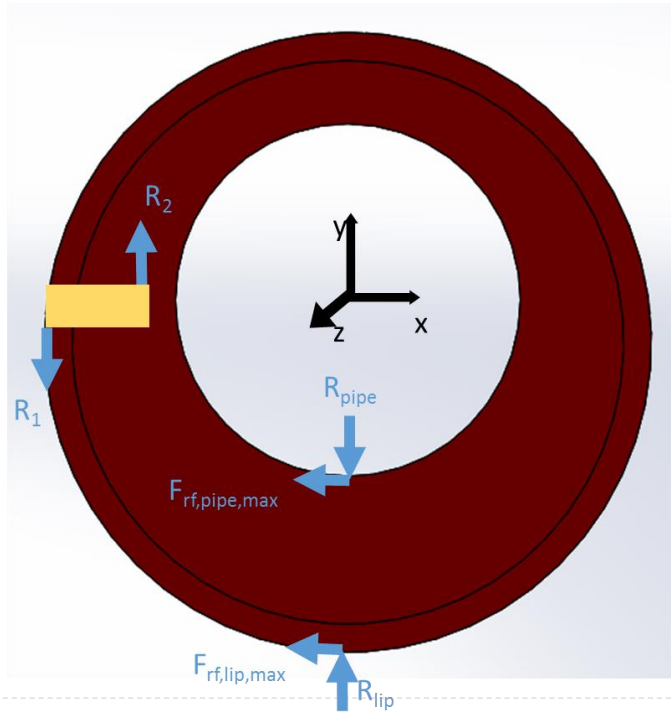

Solution:

Contact/Bearing Stress from R_{pipe} (Formulas from Roark pg 703):

$$\sigma_{max} = 0.591\sqrt{\frac{p * E}{K_D}}$$

$$b = 2.15\sqrt{\frac{p * K_D}{E}}$$

$$p = \frac{Force}{length}$$

$$K_D = \frac{D_1 * D_2}{D_1 - D_2}$$

Force=2970.5lbs, Length=4”, D_1=12.125”, D_2=12”

Substituting,

$$p = \frac{2970.5}{4} = 742.6\frac{lbs}{in}$$

$$K_D = \frac{12.125 * 12}{12.125 - 12} = 1164in$$

$$\sigma_{max} = 0.591\sqrt{\frac{742.6 * 29{,}000{,}000}{1164}} = 2542psi$$

$$b = 2.15\sqrt{\frac{742.6 * 1164}{29{,}000{,}000}} = 0.37"$$

Contact/Bearing Stress from R_{lip} (Formulas from Roark pg 703):

$$\sigma_{max} = 0.591\sqrt{\frac{p * E}{K_D}}$$

$$b = 2.15\sqrt{\frac{p * K_D}{E}}$$

$$p = \frac{Force}{length}$$

$$K_D = \frac{D_1 * D_2}{D_1 - D_2}$$

Force = 3293.5 lbs, Length = 2”, D_1 = 20”, D_2 = 19.9375”

Substituting,

$$p = \frac{3293.5}{2} = 1646.75\frac{lbs}{in}$$

$$K_D = \frac{20 * 19.9375}{20 - 19.9375} = 6380in$$

$$\sigma_{max} = 0.591\sqrt{\frac{1646.75 * 29{,}000{,}000}{6380}} = 1617psi$$

$$b = 2.15\sqrt{\frac{1646.75 * 6380}{29{,}000{,}000}} = 1.29"$$

Combined Stress from R_{pipe} and R_{lip}:

$$\sigma_{combined} = 2542 + 1617 = 4159psi$$

$$FoS_{yield} = \frac{36{,}000}{4159} = 8.7$$

$$FoS_{ultimate} = \frac{58{,}000}{4159} = 14.0$$

Applied Forces:

- F = 100lbs applied at the outer end of the handle
- R_1 = 900 lbs at the outer edge of the cam
- R2 = 800 lbs at the inner end of the handle

Material: Aluminum 6061-T6:

Yield Strength (YS)	40,000 psi
Ultimate Strength (US)	45,000 psi
Modulus of Elasticity (E)	29,700,000 psi

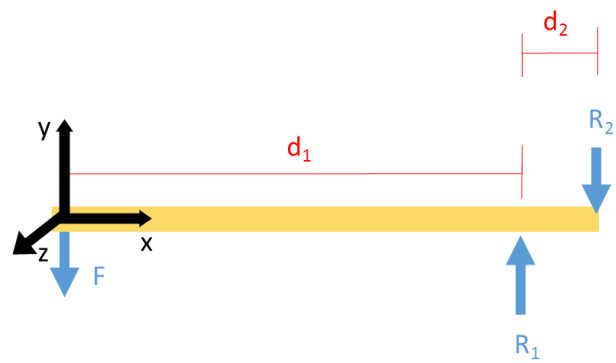

Solution:

Normal Bending Stress:

$$\sigma_{max} = \frac{Mc}{I}$$

$$M = F * d_1$$

$$I = \frac{\pi r_o^4}{4} - \frac{\pi r_i^4}{4}$$

r_o=1”, r_i=.75”, c=1”, d_1=32”, F=100lbs

Substituting,

$$M = 100 * 32 = 3200$$

$$I = \frac{\pi 1^4}{4} - \frac{\pi .75^4}{4} = .537$$

$$\sigma_{max} = \frac{32 * 1}{.537} = 5{,}960psi$$

Shear Stress:

$$\tau_{avg} = \frac{F}{A}$$

$$A = \pi r_o^2 - \pi r_i^2$$

Substituting,

$$A = \pi 1^4 - \pi .75^4 = 1.37$$

$$\tau_{avg} = \frac{100}{1.37} = 73psi$$

Von Mises Stress (Formula from Shigley's pg 223):

$$\sigma_{vonmises} = \frac{1}{\sqrt{2}}\left[(\sigma_x - \sigma_y)^2 + (\sigma_y - \sigma_z)^2 + (\sigma_z - \sigma_x)^2 + 6({\tau_{xy}}^2 + {\tau_{yz}}^2 + {\tau_{zx}}^2)\right]^{\frac{1}{2}}$$

$$\sigma_x = \sigma_{max}$$

$$\sigma_y = 0$$

$$\sigma_z = 0$$

$$\tau_{xy} = 0$$

$$\tau_{yz} = \tau_{avg}$$

$$\tau_{zx} = 0$$

Substituting,

$$\sigma_x = 5{,}960\ psi$$

$$\sigma_y = 0$$

$$\sigma_z = 0$$

$$\tau_{xy} = 0$$

$$\tau_{yz} = 73\ psi$$

$$\tau_{zx} = 0$$

$$\sigma_{vonmises} = \frac{1}{\sqrt{2}}\left[(-5{,}960)^2 + (5{,}960)^2 + 6(73^2)\right]^{\frac{1}{2}} = 5{,}961 psi$$

$$FoS_{yield} = \frac{40{,}000}{5{,}961} = 6.7$$

$$FoS_{ultimate} = \frac{45{,}000}{5{,}961} = 7.5$$

Additional Information:

2. APPENDIX B (Kevin's Analysis)

Applied Forces: F_1 = 50,600lbs at 140 deg from x axis

Moments: n/a (assume is rigidly restrained)

$$\sum_{Fx} = 50{,}600 * \cos(140) + R_x = 0$$
$$\sum_{Fy} = 50{,}600 * \sin(140) + R_y = 0$$
$$\sum_{Fz} = 0$$

Direct Stress Area = 2.0*2.0 = 4 in sq.

Shear Area = 2.5in * 2in * 2 (sides)= 10 in sq.

Material is Tempered 4130 Steel

Yield Strength (YS)	85ksi
Ultimate Strength(US)	105ksi

Yield Shear Strength (YSS) for steel = 0.57*YS

Ultimate Shear Strength (USS) for steel = 0.75*US

YSS	78.75ksi
USS	49.3ksi

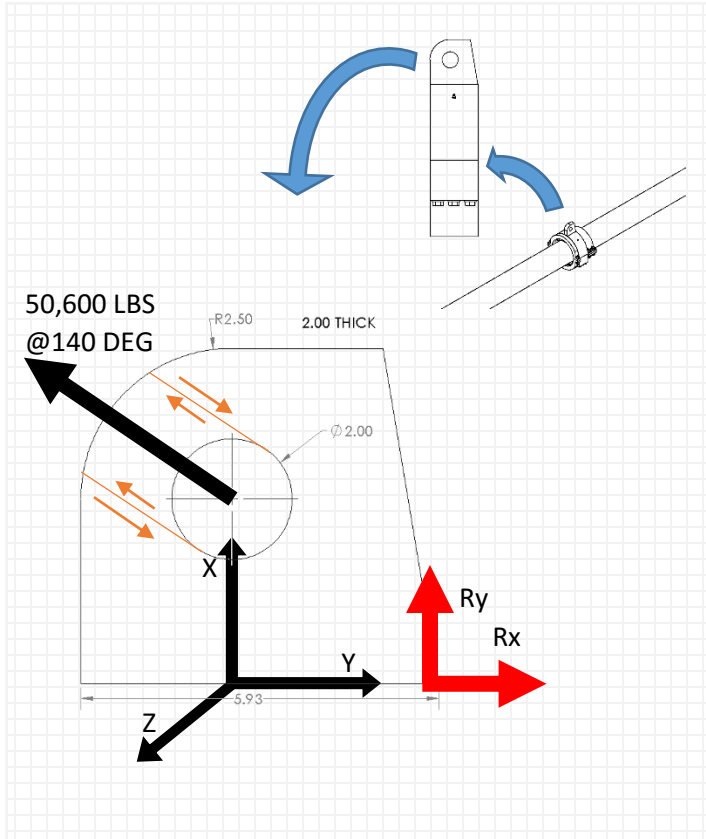

Solution:

Failure by direct stress:

50,600lbs / 4in sq = 12,650 psi 85/12.65 = 6.72 105/12.65 = 8.3

Factor of Safety(failure from direct stress)- 6.7 to Yield, 8.3 to Ultimate

Failure by shear (pullout)

50,600 / 10 in sq = 5,060 psi 49.3/5.06= 9.7 78.75/5.06=15.6

Factor of Safety(failure from shear pullout)- 9.7 to Yield, 15.6 to Ultimate

Additional information:

Applied Forces: F_1 = 50,600lbs at 140 deg from x axis

Moments: None Applied

$$\sum_{Fx} = 50{,}600 * \sin(140) + R_{x1} + R_{x2} = 0$$
$$\sum_{Fy} = 50{,}600 * \cos(140) + R_y = 0$$
$$\sum_{Fz} = 0$$
$$\sum_{Mx} = 0$$
$$\sum_{My} = 0$$
$$\sum_{Mz} = F_{1x} * D_{1y} - F_{1y} * D_{1x} + F_{2x} * D_{2y} = 0$$

Assume Rx2 and Rx1 are at extreme limits of loop-loop.

Dx=3in Dy1=3.43in Dy2=2.5in

Weld Material ER80S-D2

Ultimate Strength (US) 80ksi

Yield Strength (YS) 68 ksi

USS 60 ksi; YSS 38.7 ksi

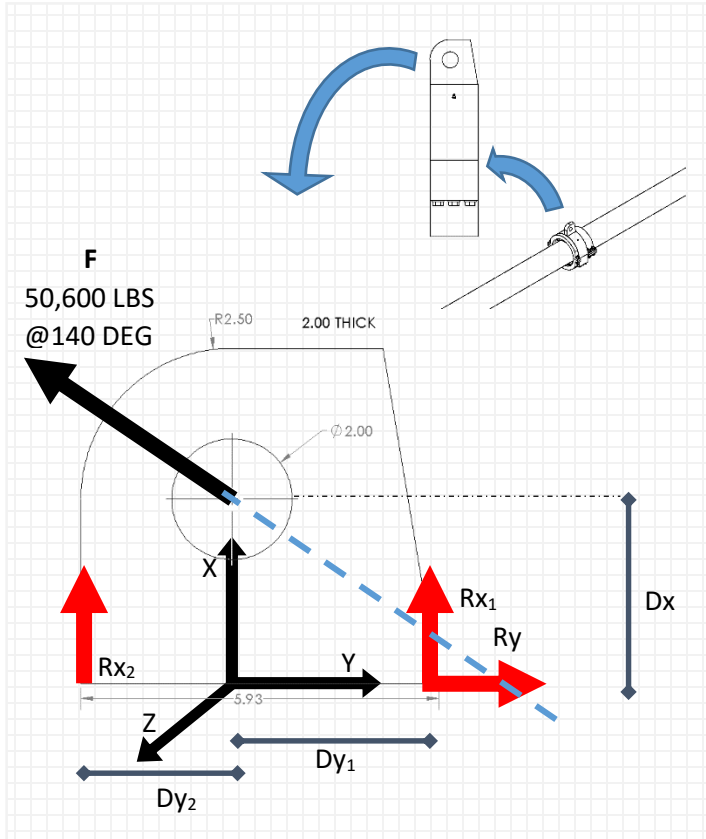

Note:

The Force F requires an equal and opposite reaction along its line of action in order for the problem to be statically restrained. The line of action of F does not pass through the base of the Loop-Loop. This means that in order for the moment about the center of the loop hole to be resisted, Ry or Rx must increase in magnitude. Rx is the only option for which a balancing force may be realistically applied. Essentially the loop is in torsion about an internal point and is applying a downward force in the front and a much higher upward force in the rear. The distribution of this force relies heavily on the elasticity and thickness of the materials involved and is beyond the scope of this analysis.

Solution:

ASSUME A FILLET WELD, 0.50IN THICK

Weld area =0.50 in*5.9 in * 2 (sides) = 5.9 in sq.

50,600 lbs / 5.9 in sq = 8600psi

60ksi /8.6ksi = 7.0; 38.7/8.6 = 4.5

Factor of Safety (weld failure)- 4.5 to Yield, 7.0 to Ultimate

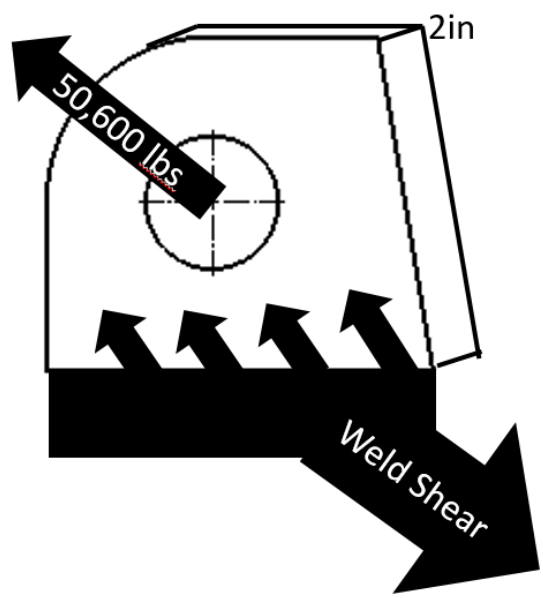

Applied Forces:

- F_1 = 50600lbs at 140 deg from y axis applied at center of loop hole (origin)

Reactions:

- **R_1** = Ramped distributed load on front flange.
- **R_2** = Ramped distributed load on rear flange
- **R_3** = Distributed load on inside surface of loop

Moments: Calculated about loop hole (origin)

$$\sum_{Fx} = F_{1x} + R_3 * L_y = 0$$

$$\sum_{Fy} = F_{1y} + \int R_1\,dx + \int R_2\,dx = 0$$

$$\sum_{Fz} = 0$$

$$\sum_{Mx} = 0$$

$$\sum_{My} = 0$$

$$\sum_{Mz} = -RE_1 * D_{x1} + RE_3 * D_{y3} - RE_2 * D_{x2} = 0$$

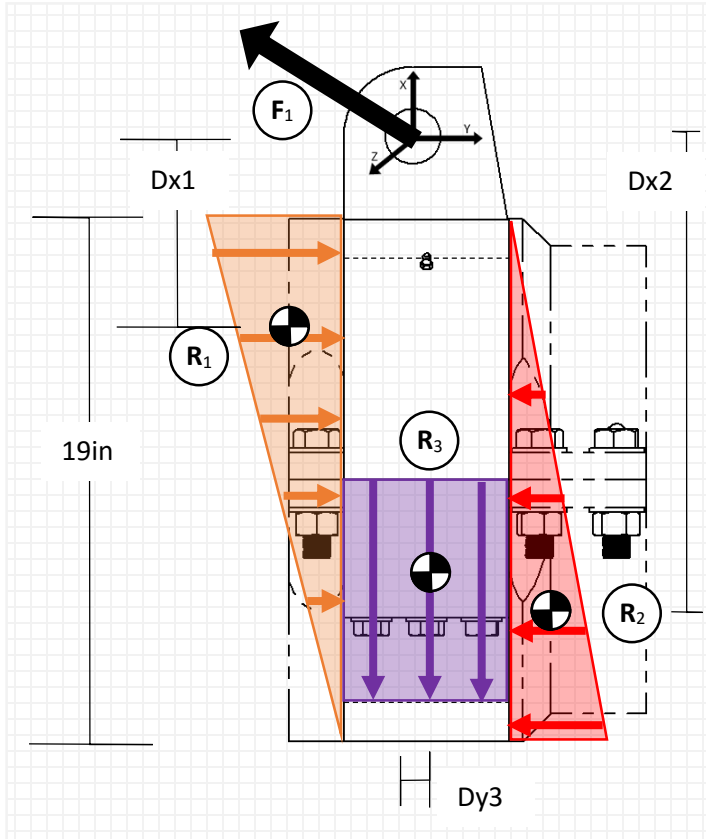

Assumptions:

- All bodies are rigid.
- All bolted assemblies are rigidly joined.
- Distributed forces in Y are ramped and can be approximated by equivalent forces applied at centroids.
- All positive forces are in positive X,Y and Z directions.
- Origin is 3.00in above 19in loop diameter

Solution:

Dy3 = 0.5in; Dx1 =3.00+19/3 =9.33in; Dx2 = 3.00+2*19/3= 15.67in

F1x = 32500lbs; F1y=40,000lbs by design constraints

$$\sum_{Fy} = F_{1y} + RE_1 + RE_2 = 0$$

Therefore, RE1 = -RE2-40000 and similarly, RE3=32500. Substituting:

$$\sum_{Mz} = -(-RE_2 - 40000) * 9.33 + 32500 * 0.5 - RE_2 * 15.67 = 0$$

RE2=389,450/6.34=61,428lbs; RE1 = 101,428lbs

R2max = 61428/19 = 6466lbs; R2 slope = 340lbs per in; R1max = 10,677lbs R1 slope = 562lbs per in

Additional information:

It is unlikely that the fit of the loop will be tight enough to function as described. It is much more likely to distribute R1 over just the top ½ and R2 over the bottom half. This will be analyzed next.

Applied Forces:

- F_1 = 50600lbs at 140 deg from y axis applied at center of loop hole (origin)

Reactions:

- **R_1** = Ramped distributed load on front flange.
- **R_2** = Ramped distributed load on rear flange
- **R_3** = Distributed load on inside surface of loop

Moments: Calculated about loop hole (origin)

$$\sum_{Fx} = F_{1x} + R_3 * L_y = 0$$

$$\sum_{Fy} = F_{1y} + \int R_1\,dx + \int R_2\,dx = 0$$

$$\sum_{Fz} = 0$$

$$\sum_{Mx} = 0$$

$$\sum_{My} = 0$$

$$\sum_{Mz} = -RE_1 * D_{x1} + RE_3 * D_{y3} - RE_2 * D_{x2} = 0$$

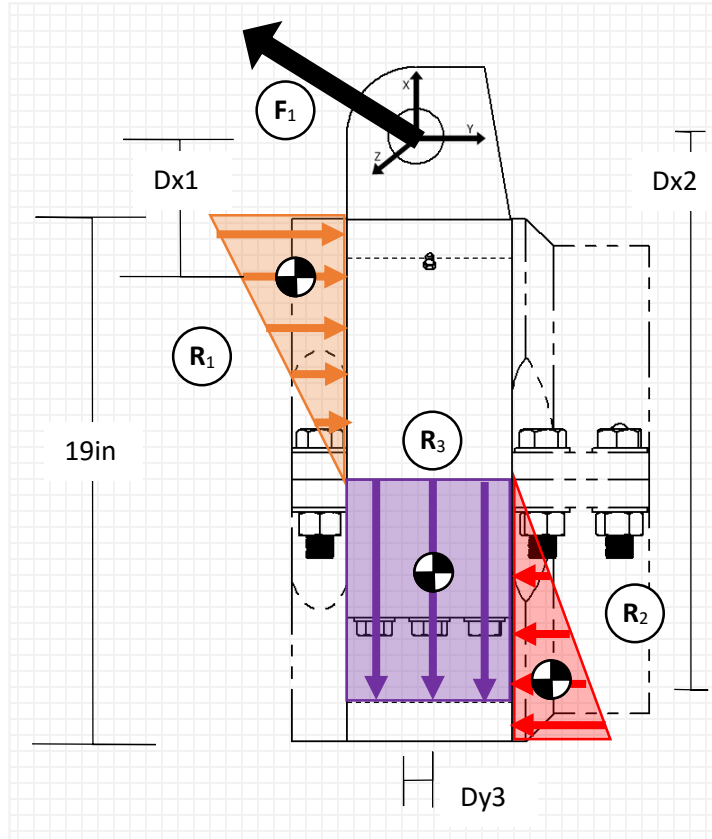

Assumptions:

- All bodies are rigid.
- All bolted assemblies are rigidly joined.
- Distributed forces in Y are ramped and can be approximated by equivalent forces applied at centroids.
- All positive forces are in positive X,Y and Z directions.
- Origin is 3.00in above 19in loop diameter.
- R1 is applied only to the loop top and R2 is applied only to the loop bottom.
-

Solution:

Dy3 = 0.5in; Dx1 =3.00+9.5/3 =6.17in; Dx2 = 3.00+9.5+2*9.5/3= 18.83in

F1x = 32500lbs; F1y=40,000lbs by design constraints

$$\sum_{Fy} = F_{1y} + RE_1 + RE_2 = 0$$

Therefore, RE1 = -RE2-40000 and similarly, RE3=32500. Substituting:

$$\sum_{Mz} = -(-RE_2 - 40000) * 6.17 + 32500 * 0.5 - RE_2 * 18.83 = 0$$

RE2=263,050/12.66=**20,778lbs**; RE1 =**60,778lbs**

R2max =20,778/9.5*2 = 4375lbs; R2 slope = 460lbs per in

R1max = 60,778/9.5*2 =12,795lbs R1 slope = 1347lbs per in

Additional information:

This implies there will be a significant shearing force (20,778lbs) applied to the bolts when the assembly is disassembled.

The total reaction forces are smaller than the theoretical, but the R1max is larger.

This solution relies heavily upon the assumption of where R1 stops and R2 begins, but it is reasonable to use for design with appropriate safety factors.

Applied Forces:

- F_1 = 50600 lbs at 140 deg on y axis
- F_2 = 20778lbs at 180 deg 11.5 in below y axis
- F_3 = 60778lbs at 0 deg 6.17 in below y axis
- NBT = net bolt tension (total bolt tension minus that used to apply moment)

Moments:

- M_4 = 136,000 lb-in CW (from loop bottom)

$$\sum_{Fx} = F_{1x} + NBT_{1-6} = 0$$
$$\sum_{Fy} = F_{1y} + F_{2y} = 0$$
$$\sum_{Fz} = 0$$
$$\sum_{Mx} = 0$$
$$\sum_{My} = 0$$
$$\sum_{Mz} = -F_2 * D_{2x} - M_4 + F_3 * D_{3x} = 0$$

Assumptions: A force equal to the total bolt tension minus the net bolt tension is applied equal and opposite at the pivot point of the loop top assembly.

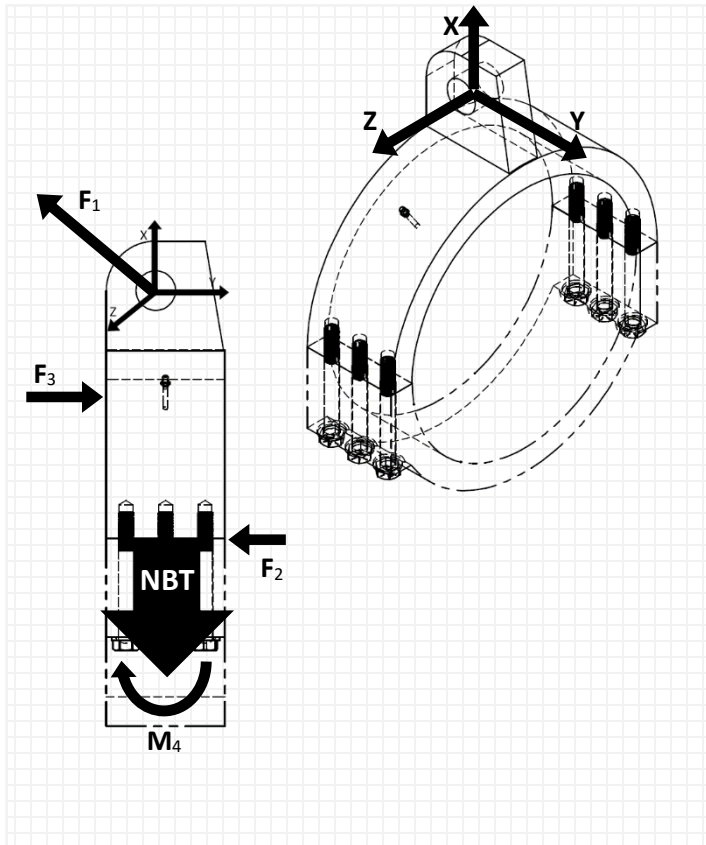

Material: A519 4130 SR or equivalent with Tensile Strength of 105ksi and Yield Strength of 85ksi.
Dimensions: OD = 19in ID 16.05in Length 6in, Half Cylinder.

Solution:
Failure due to compressive stress – conservative use maximum load from ramped load applied to 1in sq.
Maximum load from external load analysis for F3 is 12,800lbs 105/12.8= 8.2 85/12.8=6.6
Safety Factor for compressive stress **8.2** to Ultimate and **6.6** to Yield

Failure due to vertical tensile stress.
Minimum tensile area = 1.475in * 6in * 2sides = 17.7in sq 32500lbs/17.7 = 1.9ksi<<85
Safety Factor >10 for Yield and Ultimate

Failure due to bolt rupture
Tension in each bolt is $F_{nt}=(F_v*R_v+F_h*R_h)*V_n/(V_1^2+V_2^2+V_3^2+V_4^2+V_5^2+V_6^2)$
The greatest tension will occur in the bolt furthest from the pivot. (largest V_n)
$F_v*R_v=M_4$ F_h*R_h =32500*2.5in V_1,V_4= 1in; V_2,V_5=3.0in V_3,V_6=5in.
Therefore, the greatest tension will be in Bolts 3 and 6.

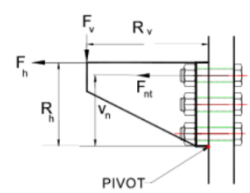

From roymech.co.uk

$$F_{3t} = 136{,}000 + (32{,}500 * 2.5) * \frac{5}{(1^2 + 3^2 + 5^2) * 2}$$

F_{3t}=15,518lbs
The shear is distributed equally over the bolts so that F_{3s} = 20800/6= 3500lbs

A 7/8”-14UNF bolt was selected from preliminary calculations.

Continued on next sheet.

Bolt Selected:

7/8”-14UNF Grade 9 class 2A fit

Minimum Tensile Strength (S_y) 180,000psi

Tensile Area:

For Bolts with greater than 100,000psi in strength the following formula is used:

$$A_t = 3.1416 * \left(\frac{E_s min}{2} - \frac{0.16238}{n}\right)^2$$

$E_s$min min pitch diameter for 7/8-14 UNF 2A is .8216

n=14

At= **.50065** in sq

*At*Tensile Strength = Maximum Tensile Load*

*.50065in sq*180,000psi=90,100lbs*

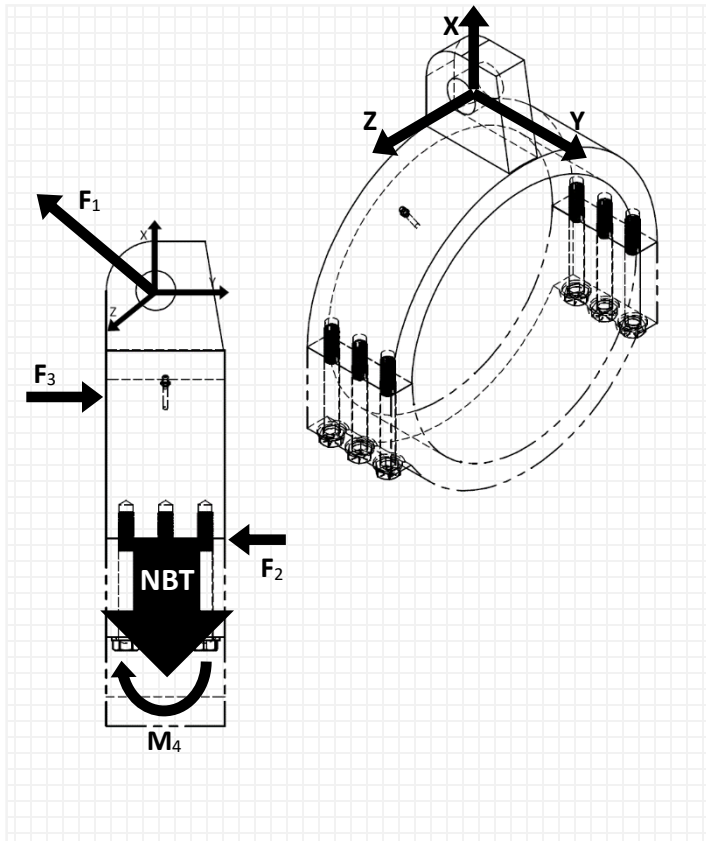

The worst case bolts have a Tensile Load of F_{3t}=15,518lbs and a Shear Load of F_{3s} = 3500lbs

$$\sigma_3 = \frac{F_{3t}}{A_t}\ ;\ \tau_3 = \frac{F_{3s}}{A_t}$$

$$\sigma_3 = 30{,}995psi\ ;\ \tau_3 = 6{,}991\ psi$$

The safety factor for bolts in tension and shear may be calculated as:

$$SF = \frac{S_y}{(\sigma_3^2 + 3 * \tau_3^2)^{\frac{1}{2}}}; SF = \mathbf{5.41}$$

If a grade 8 bolt was used SF = 4.5

The internal threads may tear out due to the difference in the strength of the fastener and the tapped material. Assume effective length of engagement (L_e)is .875in (1 diameter recommended by Fastenal)
The shear area (As) can be found with the following formula:

$$A_s = 3.1416 * n * L_e * K_n max\left[\frac{1}{2n} + 0.57735(E_s min - K_n \max)\right]$$

$E_s$min (min pitch diameter of external thread) for 7/8-14 UNF 2A is .8216
$K_n$max (max minor diameter of internal thread) for 7/8-14 UNF 2B is .814

$$A_s = 3.1416 * 14 * .875 * .814\left[\frac{1}{2 * 14} + 0.57735(.8216 - .814)\right] = 1.2563\ in^2$$

The max shear stress for the internal threads is calculated as F_{max}/A_s $\tau_{it} = \frac{F_{3t}}{A_s}$; $\tau_{it} = \frac{15{,}518}{1.2563} = 12{,}352psi$
For the A519 4130 SR Ultimate Strength is 105ksi, Ultimate Shear Strength is .75*105 ksi or 78.8ksi.
Yield Strength is 85ksi and Yield Shear Strength = .57*85ksi or 48.5ksi.

Safety Factor for Ultimate is 78.8/12.35 = **6.4**
Safety Factor for Yield is 48.5/12.35 = **3.9**

Applied Forces:

- F_1 = 32,500 lbs at -90 deg distributed over projected area of half cylinder
- F_2 = Ramped Distributed load applied to rear surface of loop bottom.
- F_3-F_8 Bolt Tensions
- F_9-F_{10} Line Stress from pivot points
- F_{11} Shear from Bolts

Moments: None applied

$$\sum_{Fx} = F_1 + F_3 + F_4 + F_5 + F_6 + F_7 + F_8 + F_9 + F_{10} = 0$$
$$\sum_{Fy} = F_2 + F_{11} = 0$$
$$\sum_{Fz} = 0$$
$$\sum_{Mx} = 0$$
$$\sum_{My} = 0$$
$$\sum_{Mz} = F_1 * D_{1y} - F_2 * D_{1x} + F_3 * D_{3y} + F_4 * D_{4y} + F_5 * D_{5y} + F_6 * D_{6y} + F_7 * D_{7y} + F_8 * D_{8y} + F_9 * D_{9y} + F_{10} * D_{10} - F_{11} * D_{11x} = \mathbf{0}$$

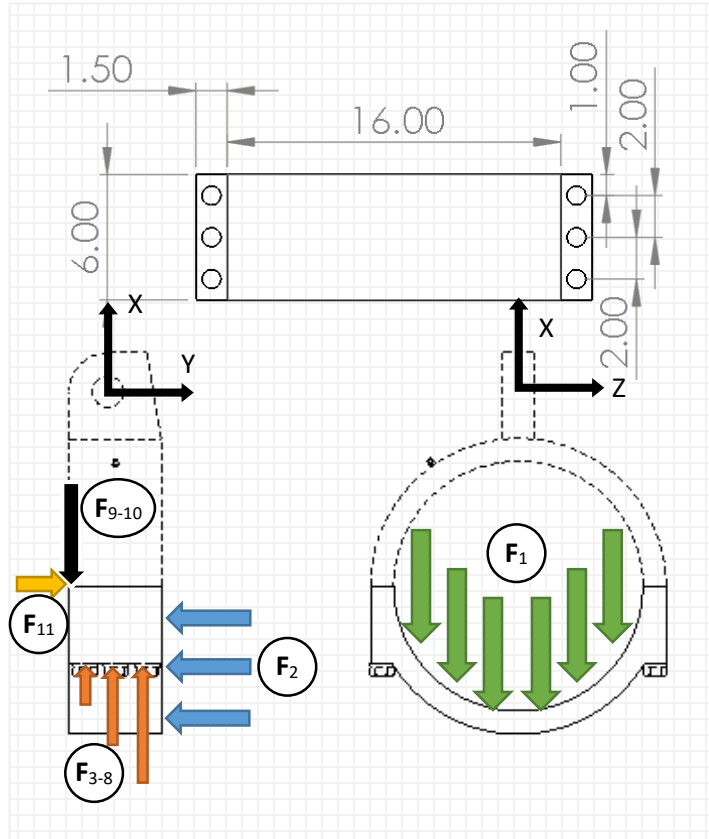

Solution:

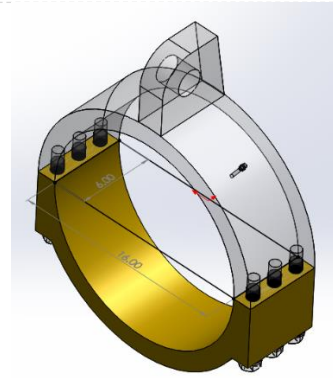

From previous page max Bolt Tension is 15,518 lbs.

$$F_{3t} = 136{,}000 + (32{,}500 * 2.5) * \frac{5}{(1^2 + 3^2 + 5^2) * 2}$$

Middle Bolt = 3/5 of Max = 9,311lbs

Close Bolt = 1/5 of Max = 3,104lbs

$F_9 = F_3+F_4+F_5-F_1/2$

F_9=15,518+9,311+3,104-16,250=11,683lbs (this is the greatest single concentrated force)

Assuming that F_9 and F_{10} are each distributed over 0.6 in^2, (.4in x 1.5in width) the maximum compressive stress is 19,472 psi.

The Loop Bottom is Tempered 4130 Steel with an Ultimate Strength of 105ksi and a Yield Strength of 85ksi.

Safety Factor 105ksi/19.5ksi = 5.4; 85ksi/19.5 = 4.4. SF **5.4** to Ultimate, **4.4** to Yield.

When the adjuster is positioned correctly, the locking handle is placed over the two pins on the locking ring, straddling the tube.
A force is exerted near the end of the tool handle creating a moment.
This moment is (eventually) resisted by 3 forces.

- The first force is the friction on the locking ring against the nylon blocks of the shell locking plates.
- The second force is the friction of the locking ring against the shell halves.
- The third force is only acting against the locking moment while the nylon blocks are on the ramped surface of the locking ring. It is generated as a reaction to the wedge halves being pressed into the cone shape of the shell halves.

The locking ring has a pitch of 2.5in per revolution and it extends for .4 of a revolution. Therefore, in .4 of the midline circumference of the locking ring (13.75*pi*.4) or 17.25 inches of travel it moves 1.0in.

From symmetry, and assuming proper assembly, it can be assumed that the forces from the blocks are equal.

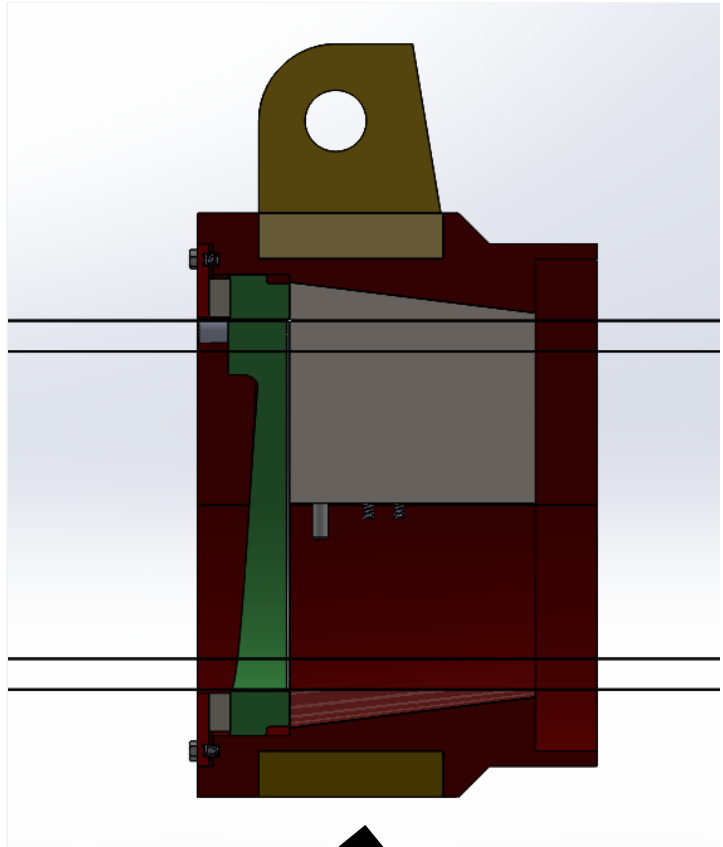

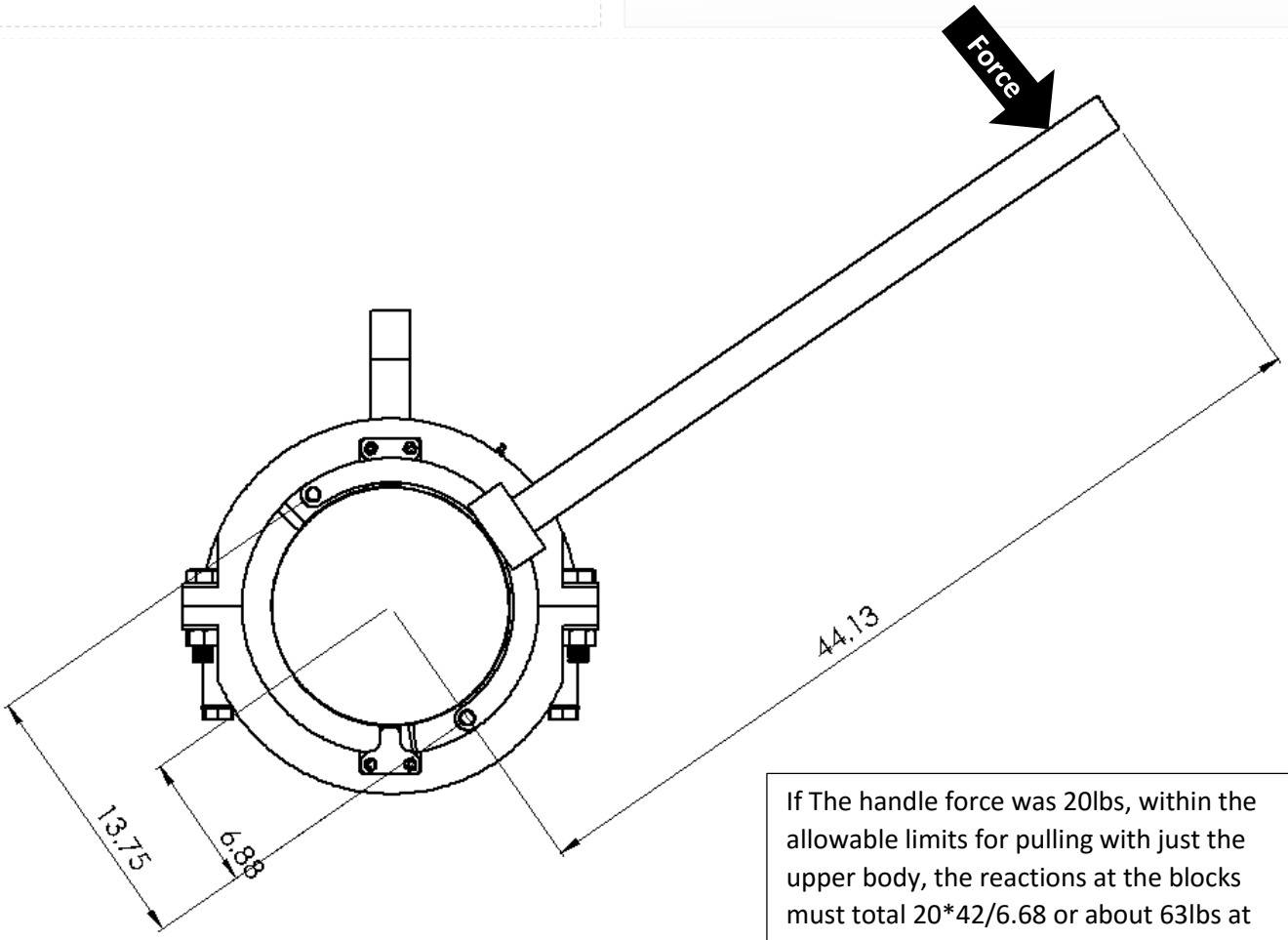

If The handle force was 20lbs, within the allowable limits for pulling with just the upper body, the reactions at the blocks must total 20*42/6.68 or about 63lbs at each block

Applied Forces: F_1 = 63lbs in black

Nylon to steel coefficient of friction =0.3 avg

Chrome plate to polished stainless steel =0.2

Assume Top normal force equals lower

Neglecting the vertical components of the upper blue arrow, 63lbs = .2Norm +.3 norm +1/17.25 norm

Normal force = 112.7lbs per shell lock or 225lbs total.

With lubrication, this can be greatly increased.

If the nylon is lubricated and a 0.15 CoF is achieved and a 0.1 for the chrome to steel with a dry film lubricant, the normal force on the forward face of the collet wedge assembly increases to 400 lbs.

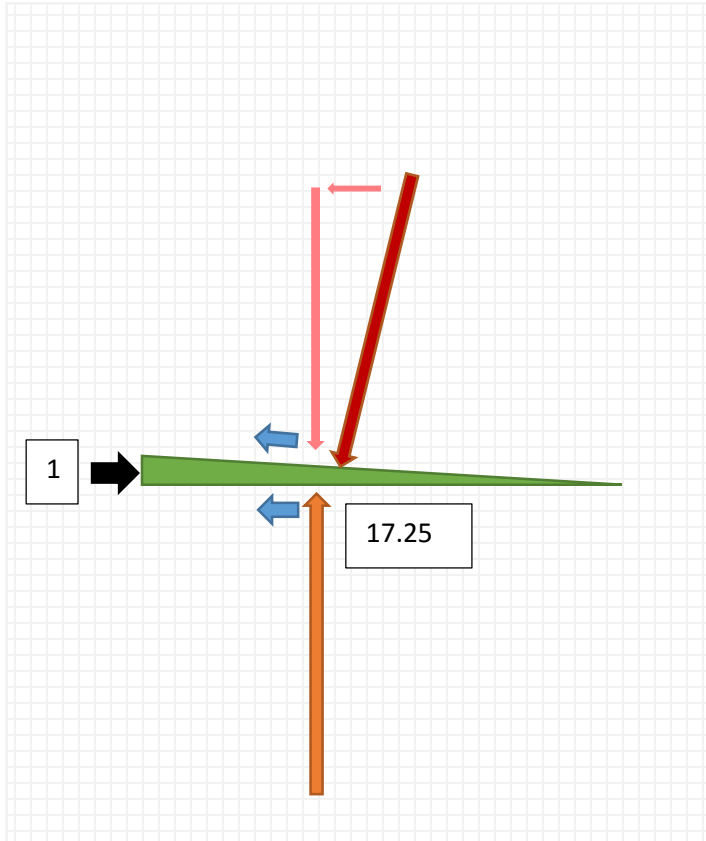

Assuming that the collet doesn't slide on the tube, FBD is below.

The ring apples a force to the collet and is restrained by the Shell/Cone

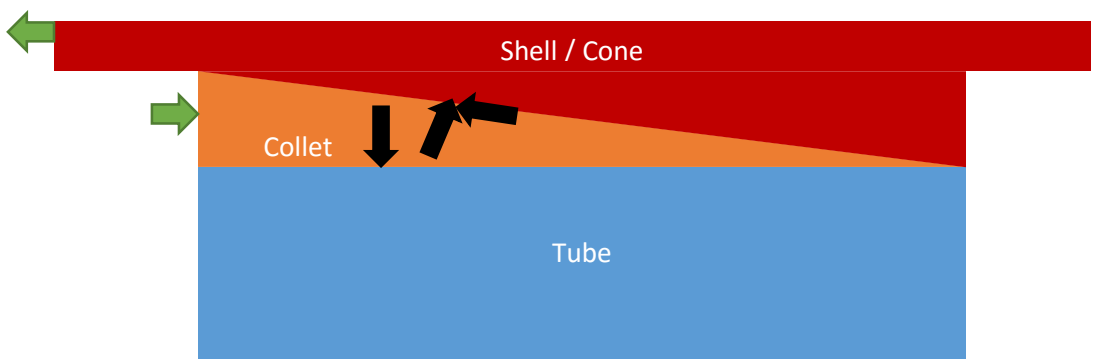

The collet is pushed into the cone applying a force to the tube. The friction of the collet / cone interface limits the efficiency.

Since the normal force is nearly equal on top and below the wedge, it can be estimated that it is equal to the applied locking force / divided by the sum of fractional ratio of the lateral component of the upper force plus the coefficient of friction between the collet and cone. Specifying it as dry film lubricated with a max CoF of 0.1, the normal force is approximately 225lbs/.225 or 1000lbs for an unlubricated locking ring or 400/.225 or 1778lbs for a lubricated locking ring.

Assuming the CoF between the Collet and Tube is 0.4 minimum, the manual locking provides 400-700lbs of axial restraint before the sling load is applied.

3. APPENDIX C (Sam's Analysis)

Applied Forces: F_1 = 4,000 lbs along x axis

$$\sum_{Fx} = F_{1x} + F_{2x} + F_{3x} = 0$$

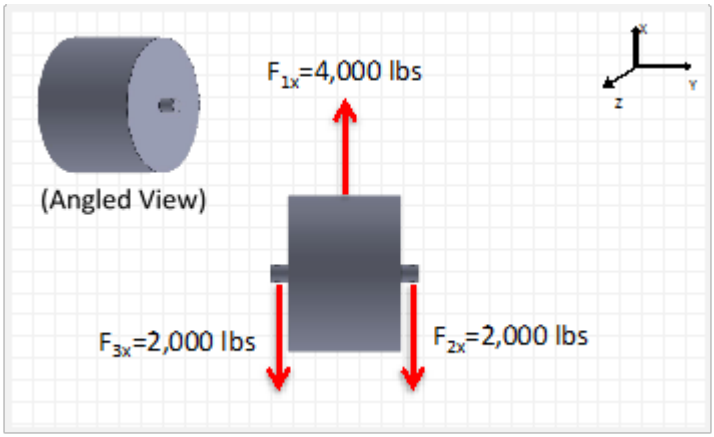

Solution:

Center Pin of Adapter		
Shear		
F1x	4000	lbs
Pin Radius	0.38	in
Allowable Shear (U)	45,000	psi
Stress	4,527	psi
SF	9.94	
Bearing Stress		
F1x	4,000	lbs
Pin Radius	0.375	in
Thickness	5	in
Allowable Stress (U)	60,000	psi
Stress	679	psi
SF	88.36	

Shear

$$Allowable\ Shear = .75 * 60{,}000\ psi$$

$$Stress\ (\sigma) = \frac{F}{2\pi r^2}$$

Bearing Stress

$$Stress\ (\sigma) = \frac{F}{\pi r t}$$

Shear and bearing stress from the pin were calculated along with the center pin. Other calculations for the pin were unnecessary.

Additional information:

The pin is the same material as the center fixture; Aluminum 2219.

Applied Forces: F_1 = 4,000 lbs along x axis

$$\sum_{Fx} = F_{1x} + F_{2x} + F_{3x} = 0$$

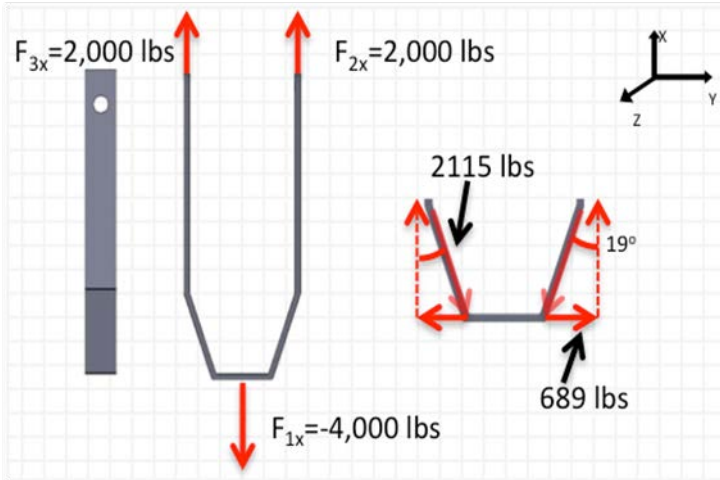

Solution:

Pin Adapter Support (main pin)		
Pin Diameter	0.75	inches
Distance b/t Tabs	5	inches
Allowable Tensile (U)	106,000	lbs
Load	4,000	lbs
Tearout	1.125	inches
F/A	5,333	psi
Thickness	0.25	inches
Width	1.5	inches
Safety Factor	19.88	yield
Bearing Stress	-6,791	psi
SF	15.61	
Support Calcs (bottom around hook)		
Shear		
Load	4,000	lbs
Allowable Shear (U)	79,500	psi
Area	0.75	in^2
F/A	5,333	psi
SF	14.91	yield
Tensile		
Bolt Diameter	0.75	in
Allowable Tensile (U)	106,000	lbs
Load	1,377	lbs
F/A	1,836	psi
Thickness	0.25	in
Width	1.5	in
SF	57.72	yield

Main Pin Support

$$Tearout = 1.5 * Pin\ Diameter$$

$$A = 2 * width * thickness$$

$$Bearing\ Stress = \frac{-Load}{width * diameter * \pi}$$

$$SF = \frac{Allowable\ Tensile}{Bearing\ Stress}$$

Around Hook

Shear

$$Allowable\ Shear = .75 * 106{,}000$$

$$A = width * thickness * 2$$

Tensile

$$Load = 2000 \tan(19) * 2$$

$$A = 2 * thickness * width$$

Additional Information:

Material is 1030 steel

Support can be manufactured by bending a ¼" thick, 1.5" wide steel plate into the correct shape.

¾" hole at base is designed for 12.3 ton Crosby Bullard Golden Gate Hook (short shank).

Applied Forces: F_{1x} = 2,000 lbs along y axis

$$\sum_{Mx} = F_{1x} * D + M_1 = 0$$

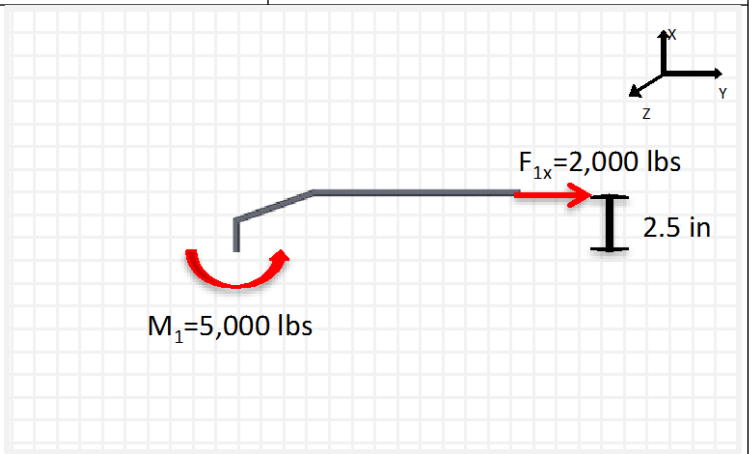

Solution:

Bending - Inner Face		
M	246	in-lbs
y	0.123	in
A	0.375	in^2
e	0.001985	in
rn	2.623015	in
Allowable (U)	106,000	psi
Stress	16,257	psi
rc	2.625	in
ri	2.5	in
ro	2.75	in
h	0.25	in
SF (U)	6.52	
Bending - Outer Face		
M	-246	in-lbs
y	-0.123	in
A	0.375	in^2
e	0.00199	in
rn	2.62301	in
Allowable (U)	106,000	psi
Stress	14,800	psi
rc	2.625	in
ri	2.5	in
ro	2.75	in
h	0.25	in
SF (U)	7.16	

Bending

$$Stress = \frac{My}{Ae(r_n - y)}$$

The above equation calculates stress in a curved beam. The stress was calculated on both the inner and outer face of the curve, and both fell satisfactorily within safety factor limits.

$$M = F_{1x} * D \qquad D = 2.5\ in \qquad A = h * 1.5 \qquad e = r_c - r_n$$

$$r_n = \frac{h}{\ln(\frac{r_o}{r_i})} \qquad r_o = h + distance\ to\ axis\ of\ rotation$$

$$r_c = r_i + \frac{h}{2}$$

$$r_i = distance\ from\ axis\ of\ rotation\ to\ bottom\ of\ beam$$

$$h = height\ of\ beam$$

Only y, the distance to the fiber analyzed, changed between the two calculations. Y changed from the distance to the inner face from the centroidal axis, to the outer face.

Additional Information:

Material is 1030 steel

Applied Forces: F_1 = F lbs along x axis

$$\sum_{Fx} = F_{1x} + F_{2x} = 0$$

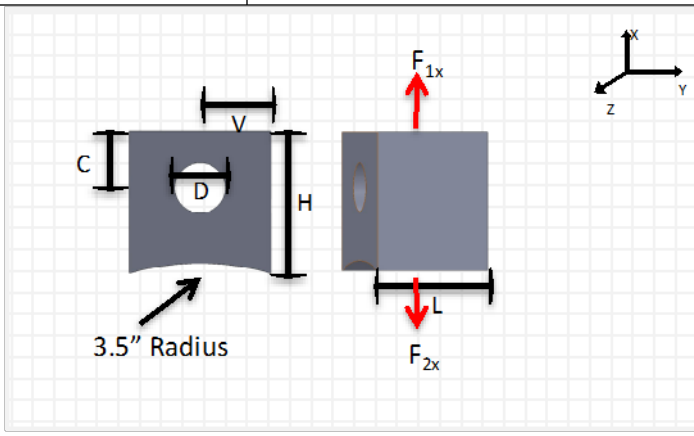

Solution:

Inner Tabs												
S/N	Pin Diameter (in) D	Length (in) L	Load (lbs) F	Tearout (in)	F/A (psi)	Tab Area (in^2)	Width (in) W	Bearing Stress (psi)	Safety Factor (Ultimate)	Tab Height (in) H	Distance from hole center to top (in) C	Distance from hole center to edge (in) V
65720-700787-041	0.64	1.277	1,000	0.96	783	1.277	1	-779	77.03	1.9	1.28	0.82
T101897	0.625	0.76	3,867	0.94	5,088	0.76	1	-5,182	11.58	1.8	1.25	0.8125
T101610	0.563	0.18	940	0.84	5,222	0.18	1	-5,905	10.16	1.7	1.126	0.7815
65720-70005-041	0.453	0.88	850	0.68	966	0.88	1	-1,357	44.20	1.4	0.906	0.7265
CPWA30804	0.437	0.625	1,000	0.66	1,600	0.625	1	-2,331	25.74	1.3	0.874	0.7185
6798116	0.4	0.255	1,000	0.60	3,922	0.255	1	-6,241	9.61	1.3	0.8	0.7
70700-77408-046	0.312	2.507	1,300	0.47	519	2.507	1	-1,058	56.71	1.0	0.624	0.656
6797692	0.311	0.640625	4,000	0.47	6,244	0.6406	1	-12,781	4.69	1.0	0.622	0.6555
65700-70020-041	0.261	1.647	900	0.39	546	1.647	1	-1,333	45.02	0.9	0.522	0.6305

$$Tearout = 1.5 * Pin\ Diameter \qquad F/A = \sigma \qquad Tab\ Area = Width * Length$$

$$Bearing\ Stress = -Load/(Length * \frac{Pin\ Diameter}{2} * \pi) \qquad Safety\ Factor = \frac{60{,}000\ lbs}{Bearing\ Stress}$$

$$Tab\ Height = Tearout + Pin\ Diameter + .25$$

S/N	Base Perimeter	Thickness (in)	Weld Area (in^2)	Psi	Material Strength	Load for 5:1
65720-700787-041	4.554	1	0.5	439	586	2,928
T101897	3.52	1	0.5	2,197	2,929	14,646
T101610	2.36	1	0.5	797	1,062	5,311
65720-70005-041	3.76	1	0.5	452	603	3,014
CPWA30804	3.25	1	0.5	615	821	4,103
6798116	2.51	1	0.5	797	1,062	5,312
70700-77408-046	7.014	1	0.5	371	494	2,471
6797692	3.28125	1	0.5	2,438	3,251	16,254
65700-70020-041	5.294	1	0.5	340	453	2,267

$$Base\ Perimeter = 2L + 2w \qquad Weld\ Area = \frac{Weld\ Thickness^2}{2} \qquad PSI = \frac{F}{Weld\ Area * Base\ Perimeter}$$

$$Weld\ Material\ Strength\ (U) = PSI/.75 \qquad Load\ for\ 5{:}1 = Weld\ Material\ Strength * 5$$

Above are the strength calculations and size requirements for welding the tabs.

Additional information:

Material: Aluminum 2219: Ultimate: 60,000 lbs Yield: 42,000 lbs

Tabs need a weld with minimum strength of 16,254 psi in tension to cover worst case scenario.

Applied Forces: F_1 = F lbs along x axis

$$\sum_{Fx} = F_{1x} + F_{2x} = 0$$

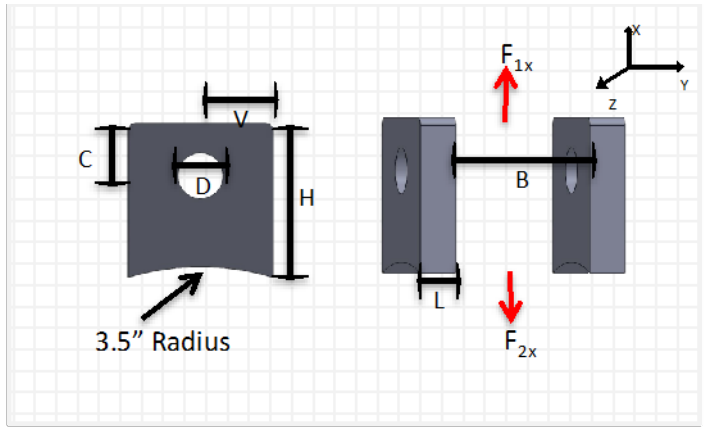

Solution:

Outer Tabs													
S/N	Pin Diameter (in) D	Distance b/t Tabs (in) B	Load (lbs) F	Tearout (in)	F/A (psi)	Length (in) L	Width (in)	Bearing Stress (psi)	Safety Factor (Ultimate)	Tab Width (total) W	Tab Height (in) H	Hole Center to Top (in) C	Hole Center to Edge (in) V
S6170-70067-041	0.656	3.695	3,867	1.0	2,974	0.65	1	-2,886	20.79	1.7	1.9	1.312	0.828
T103124-101	0.5	1.5	1,800	0.8	1,385	0.65	1	-1,763	34.03	1.5	1.5	1	0.75
PE.17153	0.531	0.5	1,940	0.8	1,492	0.65	1	-1,789	33.54	1.5	1.6	1.062	0.7655

$$Tearout = 1.5 * Pin\ Diameter \qquad F/A = \sigma \qquad Tab\ Area = 2 * Width * Length$$

$$Bearing\ Stress = -Load/(Length * Pin\ Diameter * \pi) \qquad Safety\ Factor = \frac{83{,}000\ lbs}{Bearing\ Stress}$$

$$Tab\ Height = Tearout + Pin\ Diameter + .25$$

Each tab has specific requirements (size, load, height) and had to be calculated separately. Above is a table of the values calculated for each tab.

S/N	Base Perimeter	Weld Thickness (in)	Weld Area (in^2)	Psi	Weld Material Strength (U)	Load for 5:1
S6170-70067-041	6.6	1	0.5	1,172	1,562	7,811
T103124-101	6.6	1	0.5	545	727	3,636
PE.17153	6.6	1	0.5	588	784	3,919

$$Base\ Perimeter = 4L + 4w \qquad Weld\ Area = \frac{Weld\ Thickness^2}{2} \qquad PSI = \frac{F}{Weld\ Area * Base\ Perimeter}$$

$$Weld\ Material\ Strength\ (U) = PSI/.75 \qquad Load\ for\ 5{:}1 = Weld\ Material\ Strength * 5$$

Above are the load calculations for welding of the outer tabs. The outer tabs did not contain the worst-case scenario, which is what the overall weld was based on.

Additional information:

Material: Aluminum 2219: Tensile: 60,000 lbs / Yield: 42,000 lbs

Tabs need a weld with minimum strength of 16,500 psi (ultimate) for a 5:1 safety factor.

Applied Forces: F_1 = 130,000 lbs along x axis

$$\sum_{Fx} = F_{1x} + \Sigma F_{2x-6x} = 0$$

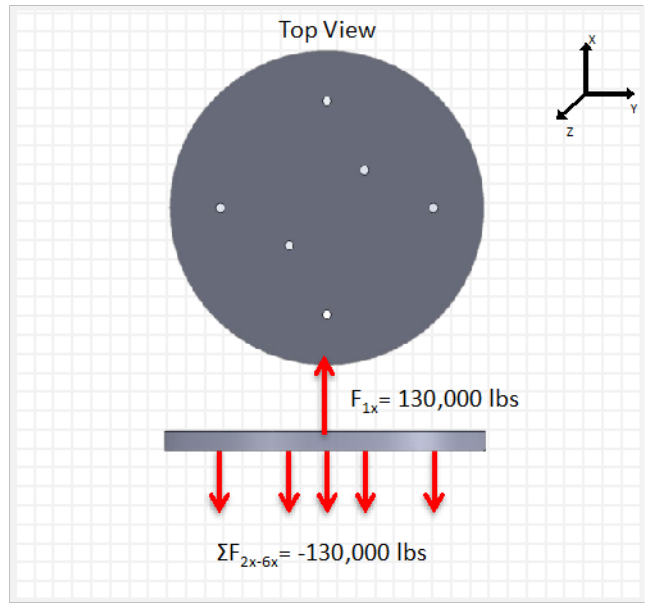

Solution:

Top		
W	130,000	lbs
L	12	in
Z	20	in^3
I	20	in^4
r	1	in
σ	19,500	psi
Allowable	176,000	lbs
SF	9.03	

Center Bolts		
Tension		
F	130,000	lbs
A	4.71	in^2
Radius	0.5	in
F/A	27,587	psi
Allowable (U)	150,000	lbs
SF	5.44	

Top Plate

$$\sigma = \frac{WL}{4Z}$$

Equation for greatest stress in beam constrained at both ends.

$$Z = I/r$$

$$I = \frac{BH^3}{12}$$

$$B = 30\ in\ (width)$$

$$H = 2\ in\ (thickness)$$

Center Bolts

$$A = 6\pi r^2$$

Additional information:

Plate material is 1095 steel.

Plate has a 15” radius and is 2” thick.

Plate was modeled as beam restrained at both ends.

Six, 26” long, 1” diameter bolts with a minimum tensile strength of 150,000 lbs are used to secure the top plate.

Applied Forces: $F_{\Sigma 1\text{-}6x}$ = 130,000 lbs along x axis

$$\sum_{Fx} = \Sigma F_{1x-6x} + \Sigma F_{7x-14x} = 0$$

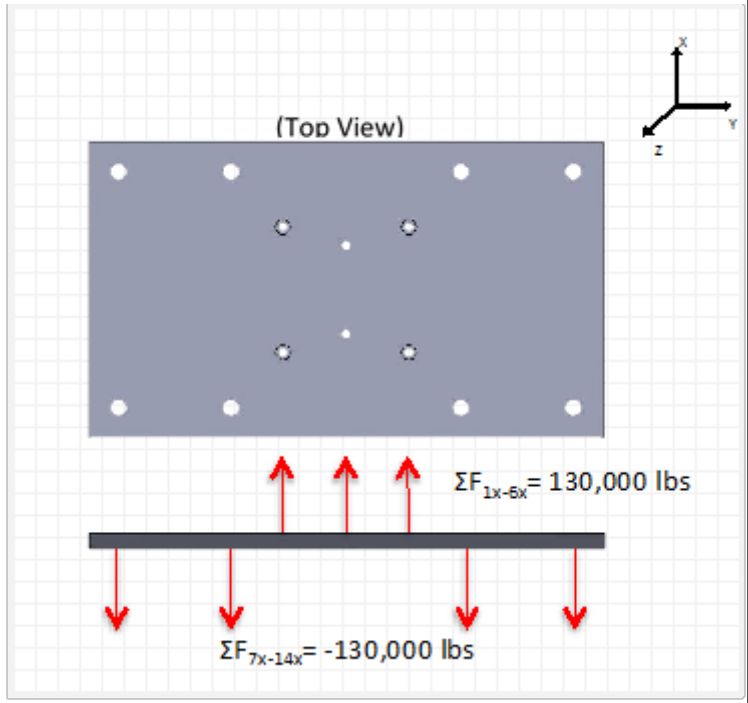

Solution:

Middle Plate		
ΣF1x-6x	130,000	lbs
L	31	in
Z	26.67	in^3
I	26.67	in^4
r	1	in
σ	37,781	psi
Allowable (U)	213,000	psi
SF	5.64	
Deflection		
ΣF1x-6x	130,000	lbs
L	31	in
E	28,400,000	psi
I	26.67	in^4
Deflection	0.11	in

Bolts for Middle/Bottom Plates		
ΣF1x-6x	130,000	lbs
A	25.13	in^2
(ΣF1x-6x)/A	5,173	psi
Allowable	150,000	psi
SF	29.00	

Plate - Stress

$$\sigma = \frac{(\Sigma F_{1x-6x})L}{4Z}$$

Equation for highest stress in beam constrained at both ends

$$Z = I/r$$

$$I = \frac{BH^3}{12}$$

$$B = 40\ in \quad H = 2\ in$$

The length is set as the distance between the inner most bolts.

Deflection

$$Deflection = \frac{(\Sigma F_{1x-6x})L^3}{48EI}$$

Bolts

$$A = \pi * r^2 * 8$$

$$r = 1\ in$$

Additional information:

Plate material is 4340 steel.

Plate is 40” wide, 2” thick, and 70” long

Eight 2” diameter, 20” long bolts are used to secure the middle plate.

Larger bolts are used (with an increased safety factor) to cut down on deflection stack up.

Applied Forces: F_{1x} = 65,000 lbs along the x axis

$$\sum_{Fx} = F_{1x} + F_{2x} + F_{3x} = 0$$

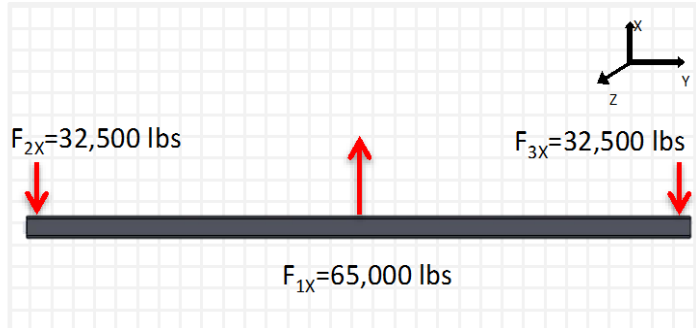

Solution:

I-Beam		
F1x	65,000	lbf
l	276	in
Z	263	in^3
σ	17,053	psi
W12x190	(or equivalent)	
Psi Requirement (U)	85,266	psi
Deflection		
F1x	65,000	lbs
L	276	in
E	29,700,000	psi
I	1,890	in^4
Deflection	0.51	in

I-Beam

$$\sigma = \frac{F_{1x}L}{4Z}$$

Above is the equation for the highest stress in a beam constrained at both ends. The result gives an allowable ultimate stress of 85 ksi for a 5:1 safety factor.

The Z factor (section modulus) was pulled from the 27th edition of the Machinery's Handbook for a W12x190 I-beam.

$$Deflection = \frac{F_{1x}L^3}{48EI}$$

Deflection of the I-beam was calculated to be a half-inch at max load.

The second moment of area (I) was pulled from the 27th edition of the Machinery's Handbook.

Additional Information:

- The stress requirement of the beam allows it to be made out of 1030 steel for a little less than a 5:1 safety factor to yield.

Applied Forces: F_1 = 65,000 lbs along x axis

Plate

$$\sum_{Fx} = (F_{1x} * L) + \Sigma F_{2x-5x} = 0$$

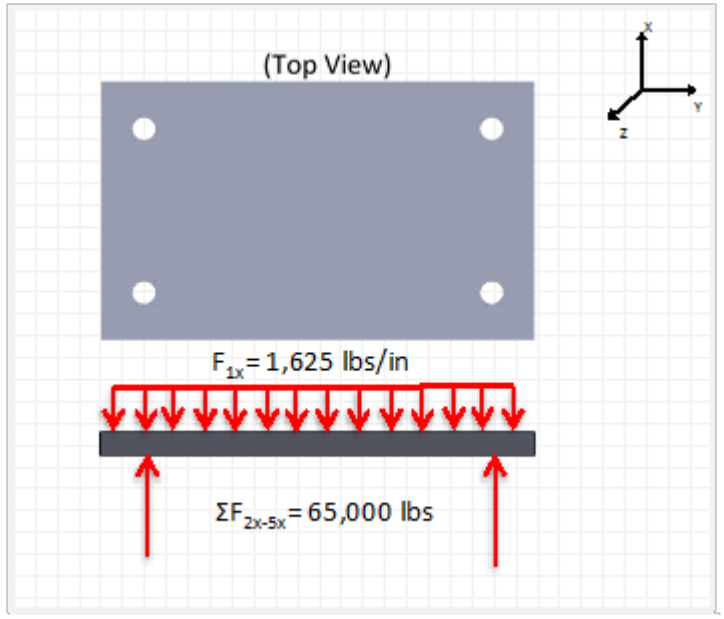

Solution:

Bottom Plate		
F1x	65,000	lbs
L	24	in
Z	26.67	in^3
I	26.67	in^4
r	1	in
σ	7,313	psi
Allowable (U)	186,000	lbs
SF	25.44	
Bending		
F1x*L	65,000	lbs
L	24	in
E	29,700,000	psi
I	16	in^4
Deflection	0.039	in

Plate

$$\sigma = \frac{F_{1x}L}{8Z}$$

Equation for highest stress in a beam supported at both ends with a distributed load.

$$Z = I/r$$

$$I = \frac{BH^3}{12}$$

$$B = 40\ in\ \ H = 2\ in$$

Bending was looked at around the I-beam, as the plate is fully support down the I-beam.

$$Deflection = \frac{(F_{1x} * L)L^3}{48EI}$$

The thickness of the plate could be reduced to decrease the excess safety factor, but a thicker plate is needed to reduce the deflection. The deflection increases 10 times if the thickness decreases by ½.

Additional information:

Plate material is 4130 steel.

Plate is 40” long, 19” wide, and 2” thick.

Applied Forces: F_1 = 40,000 lbs along y axis

F_2 = 32,500 lbs along x axis

$$\sum_{Fx} = F_{1x} + F_{2x} = 0$$

$$\sum_{Fy} = F_{1y} + F_{2y} + F_{3y} = 0$$

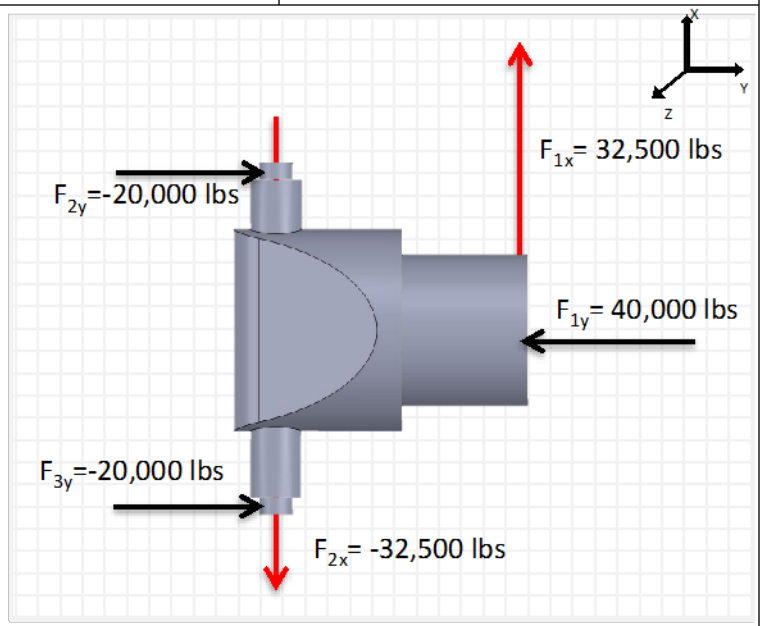

Solution:

Deflection of pin			
δ	0.338	Deflection at midpoint	in
P	32,500	Load	lbs
L	216	Length	in
E	29,000,000	Modulus of elasticity	psi
I	695.46	Second Moment of area	in^4
	0.032	Deflection at base of pin	

Tube Adapter		
Shear		
F1y	40,000	lbs
A	6.28	in^2
F/A	6,366	psi
Allowable (U)	61,125	psi
SF	9.60	
Bearing Stress		
F1y	40,000	lbs
A	6.28	in^2
F/A	6,366	psi
Allowable (U)	81,500	psi
SF	12.80	
Deflection		
F1y	40,000	lbs
L	21	in
E	29,000,000	psi
I	3.73	in^4
Deflection	0.0714	in

Deflection of Pin

$$\delta = \frac{PL^3}{48EI}$$

$$\delta_{base\ of\ pin} = \delta_{midpoint}/length\ of\ pin$$

Shear

$$A = (\pi * r^2) * 2$$

$$r = 1$$

Area is based off top of tube

$$Allowable\ Shear = .75 * 81{,}500\ lbs$$

Bearing Stress

$$A = \pi * r * d * 2$$

$$d = depth\ into\ plate = 1\ inch$$

Bearing stress is based off top of tube and contact with top and middle plate

Deflection

$$Deflection = \frac{F_{1y}L^3}{48EI}$$

Deflection is due to the axial load applied by the tube.

$$I = \frac{\pi}{4}(r_{outer}^4 - r_{inner}^4)$$

$$r_{outer} = 1.5\ in \qquad r_{inner} = .75$$

Additional information:

- Calculating the deflection of the pin at the base of the beam allows me to oversize the pin hole by the amount of deflection and discount any load applied by a moment.
- Adapter is welded to beam with Er70
- Adapter is 1025 steel

4. APPENDIX D (Drawing Package)

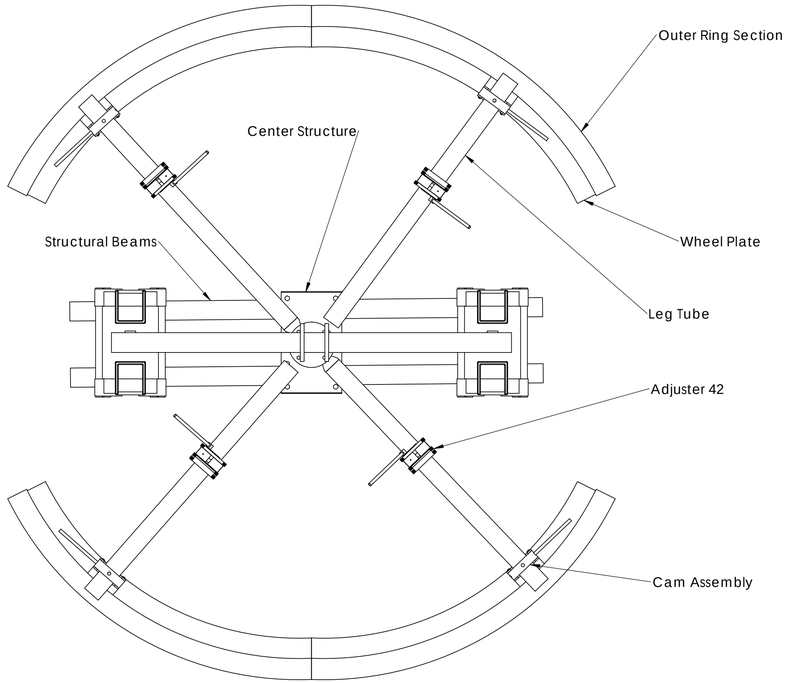

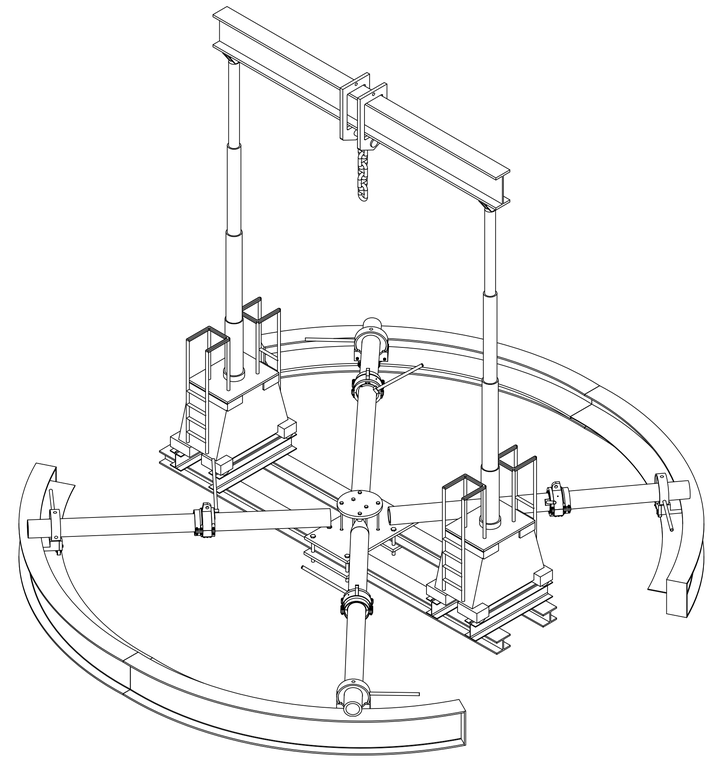

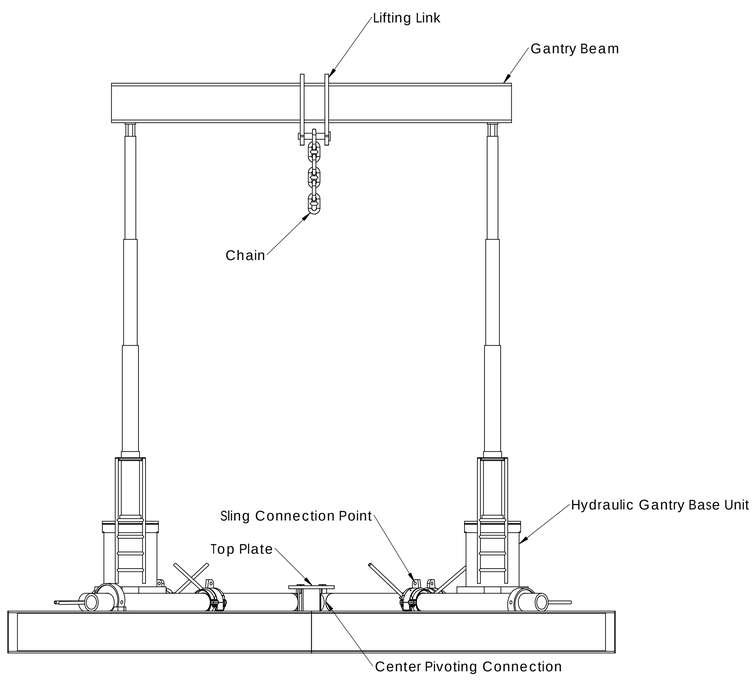

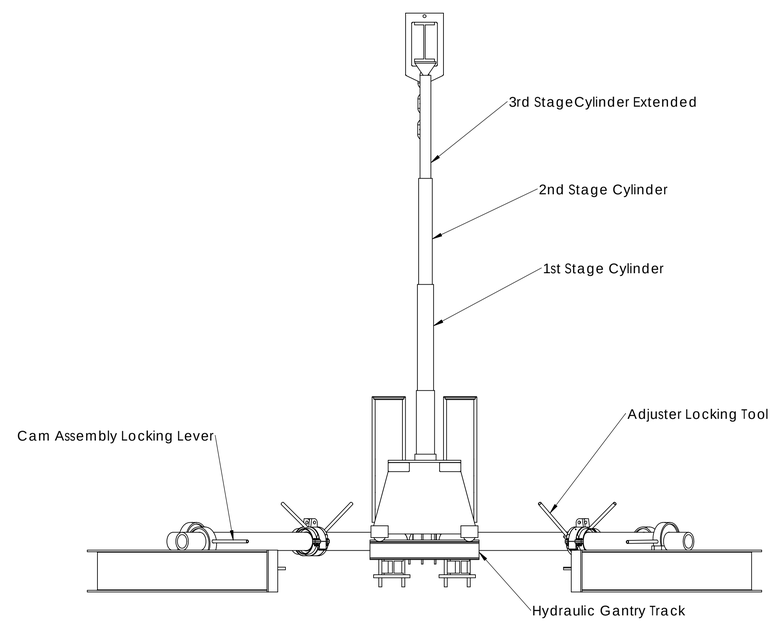

NEXT ASSY | USED ON
APPLICATION

UNLESS OTHERWISE SPECIFIED:
DIMENSIONS ARE IN INCHES
TOLERANCES:
FRACTIONAL ±
ANGULAR: MACH ± BEND ±
TWO PLACE DECIMAL ±
THREE PLACE DECIMAL ±
INTERPRET GEOMETRIC TOLERANCING PER:
MATERIAL
FINISH
DO NOT SCALE DRAWING

	NAME	DATE
DRAWN		
CHECKED		
ENG APPR.		
MFG APPR.		
Q.A.		

COMMENTS:

TITLE:
UNIVERSAL PROOF LOADER

SIZE **D** | DWG. NO. UPL-1 | REV

SCALE: 1/ 50 | WEIGHT: | SHEET 1 OF 1

NOTES:

1. BREAK EDGES ON ALL EXTERNAL CORNERS

2. MAXIMUM RADUIS ON INTERNAL CORNERS 0.005

3. ITEMS 6 AND 7 ARE NOT SHOWN

4. HARD CHROME PLATE .02 MIN THICKNESS ON CAM AND CAM MATING SURFACES OF LIP AND LIP BACK

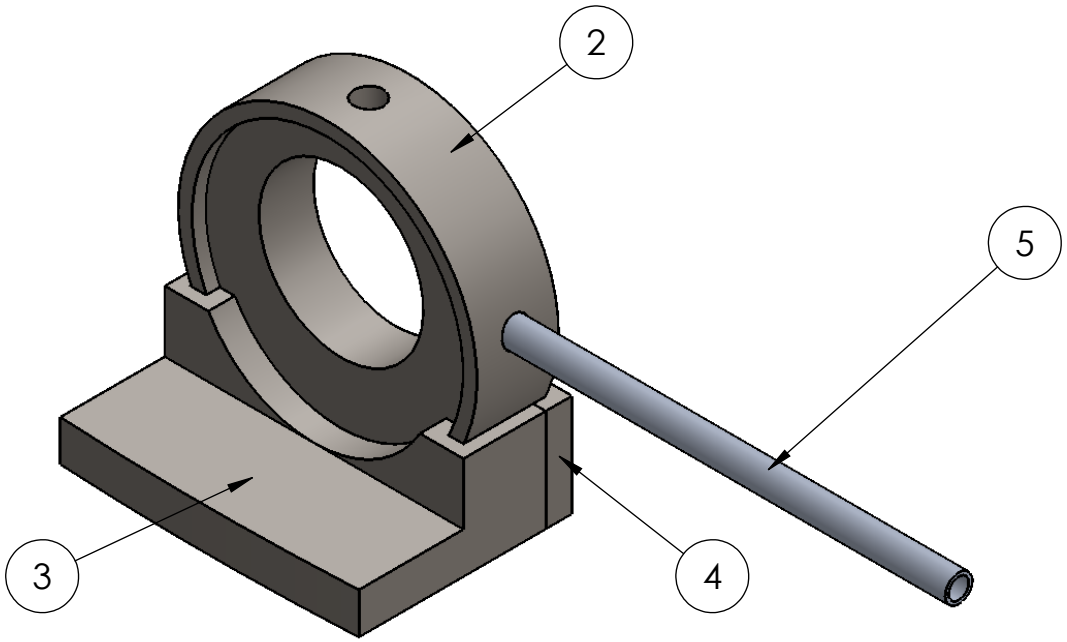

ITEM NO.	-1 REQD	DAI	PART NO.	DESCRIPTION	MATERIAL	MATERIAL SPEC & NO.
7	2		91257A961	CAP SCREW 1"-8 x 4"		GR 8
6	2			COLSON CASTER		
5	1		-5	SMALL HANDLE	2" x 0.25" x 1.5" x 36" TUBE	6061-T6
4	1		-4	LIP BACK		
3	1		-3	LIP		
2	1		-2	CAM		
1	X		UPL-19-1	CAM MECHANISM		

PARTS LIST

NC STATE UNIVERSITY

NORTH CAROLINA STATE UNIVERSITY
P.O. BOX 7801, Raleigh, North Carolina

UNLESS OTHERWISE SPECIFIED
DIMENSIONS ARE IN INCHES
TOLERANCES ARE:
FRACTIONS ±1/32 DECIMALS .XX ± .01 .XXX ± .005 ANGLES ± .5°

DRAWN: BAHATHCO
DATE: 4 APR 2016

CAM MECHANISM

SHEET 1 OF 4
MATERIAL: NONE
SCALE: 1 : 10
SIZE: A
DWG. NO. **UPL 19-1**
REV.

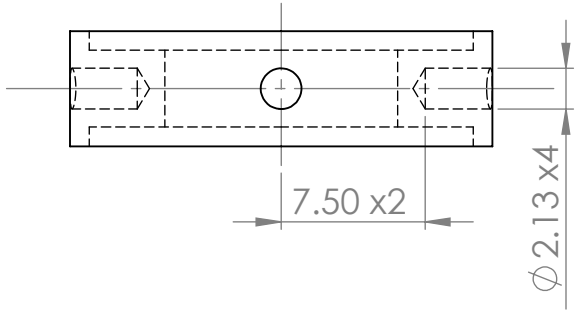

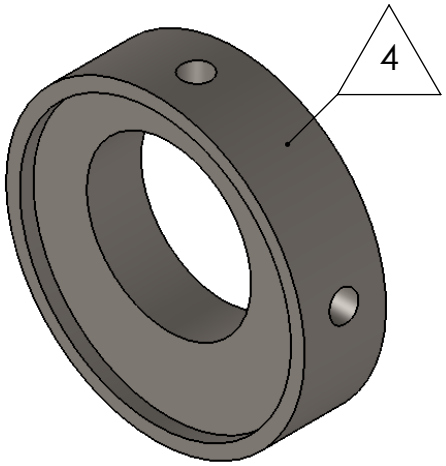

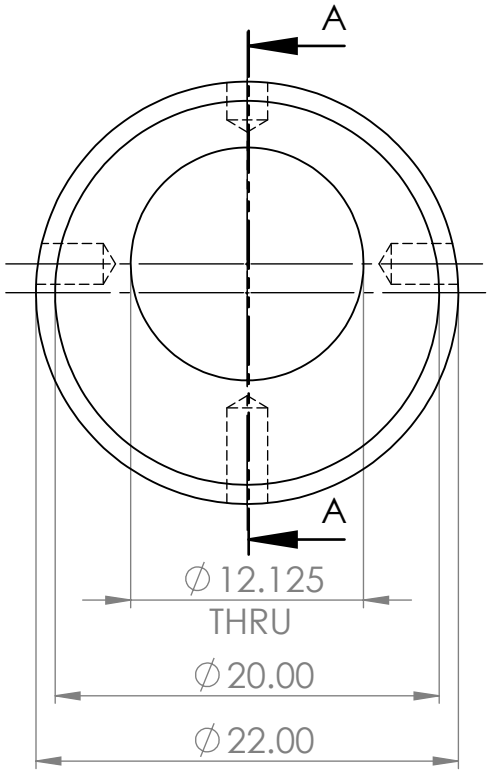

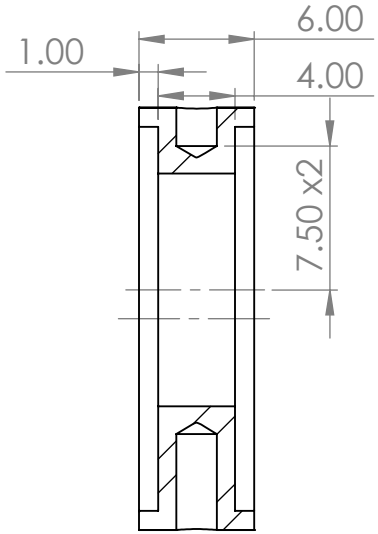

SECTION A-A

SEE SHEET 1 FOR NOTES AND PARTS LIST

NC STATE UNIVERSITY *NORTH CAROLINA STATE UNIVERSITY* P.O. BOX 7801, Raleigh, North Carolina	UNLESS OTHERWISE SPECIFIED DIMENSIONS ARE IN INCHES TOLERANCES ARE: FRACTIONS ±1/32 DECIMALS .XX ± .01 .XXX ± .005 ANGLES ± .5°	BAHATHCO DRAWN	4 APR 2016 DATE	**CAM**
	SHEET 2	MATERIAL A36 STEEL	SCALE 1 : 10	SIZE A DWG. NO. **UPL 19-2** REV.

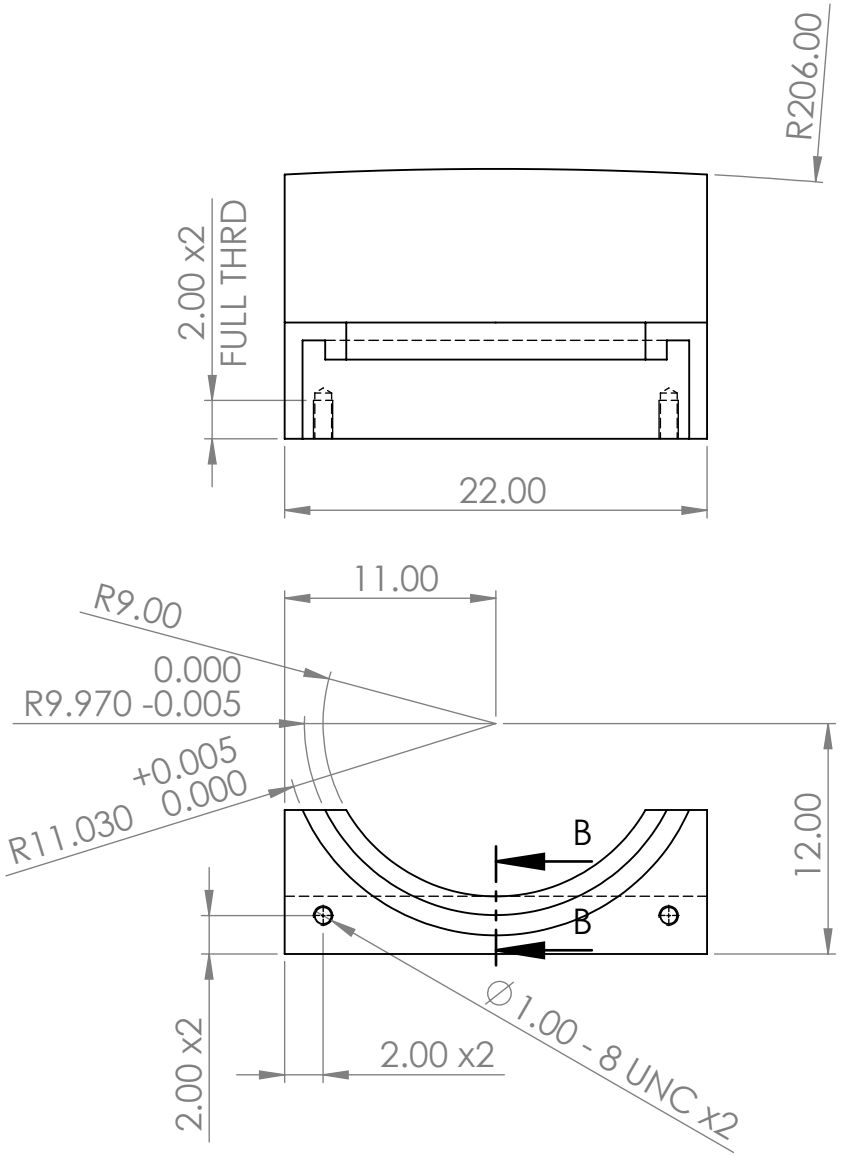

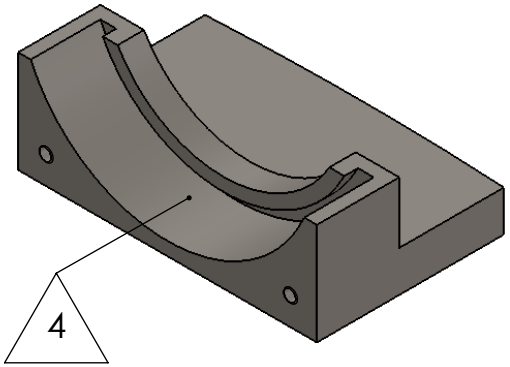

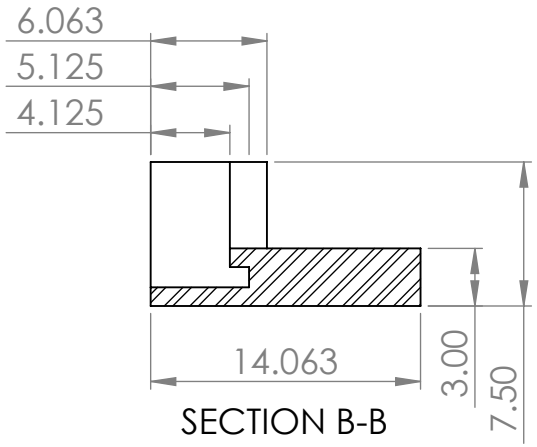

SEE SHEET 1 FOR NOTES AND PARTS LIST

NC STATE UNIVERSITY	UNLESS OTHERWISE SPECIFIED DIMENSIONS ARE IN INCHES TOLERANCES ARE: FRACTIONS ±1/32 DECIMALS .XX ± .01 .XXX ± .005 ANGLES ± .5°	BAHATHCO DRAWN	4 APR 2016 DATE	**LIP**
NORTH CAROLINA STATE UNIVERSITY P.O. BOX 7801, Raleigh, North Carolina	SHEET 3	MATERIAL A36 STEEL	SCALE 1 : 10	SIZE A DWG. NO. **UPL 19-3** REV.

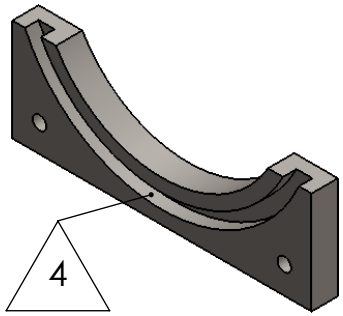

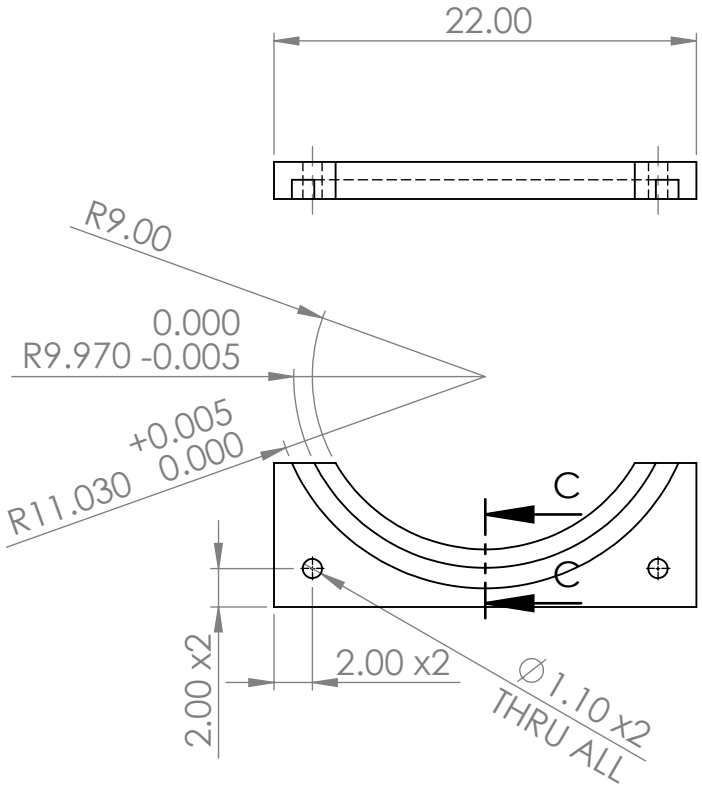

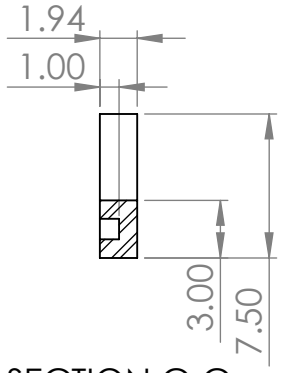

SECTION C-C

SEE SHEET 1 FOR NOTES AND PARTS LIST

NC STATE UNIVERSITY	UNLESS OTHERWISE SPECIFIED DIMENSIONS ARE IN INCHES TOLERANCES ARE: FRACTIONS ±1/32 DECIMALS .XX ± .01 .XXX ± .005 ANGLES ± .5°	BAHATHCO DRAWN	4 APR 2016 DATE	**LIP BACK**
NORTH CAROLINA STATE UNIVERSITY P.O. BOX 7801, Raleigh, North Carolina	SHEET 4	MATERIAL A36 STEEL	SCALE 1 : 10	SIZE A DWG. NO. **UPL 19-4** REV.

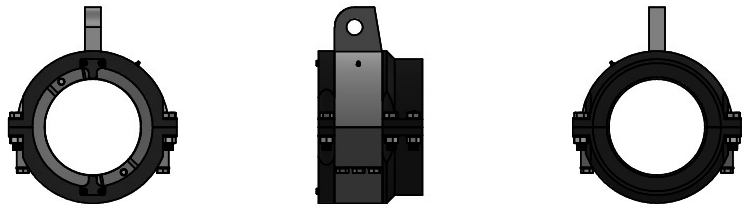

NOTES:

1. REMOVE ALL BURRS AND BREAK ALL SHARP EDGES.
2. ADJUSTER MUST BE ASSEMBLED IN PLACE ON LEG-TUBE.
3. HARD CHROME PLATE .02 MIN THICKNESS ON INNER BEARING SURFACE AREA.
4. DESIGN FACTOR OF SAFETY IS 3:1 TO YIELD AND 5:1 TO ULTIMATE STRENGTH.
5. HEAT TREAT IN ACCORDANCE WITH AMS 2759.
6. SUGGESTED SOURCES OF SUPPLY ARE NOT A GUARANTEE OF AVAILABILITY.

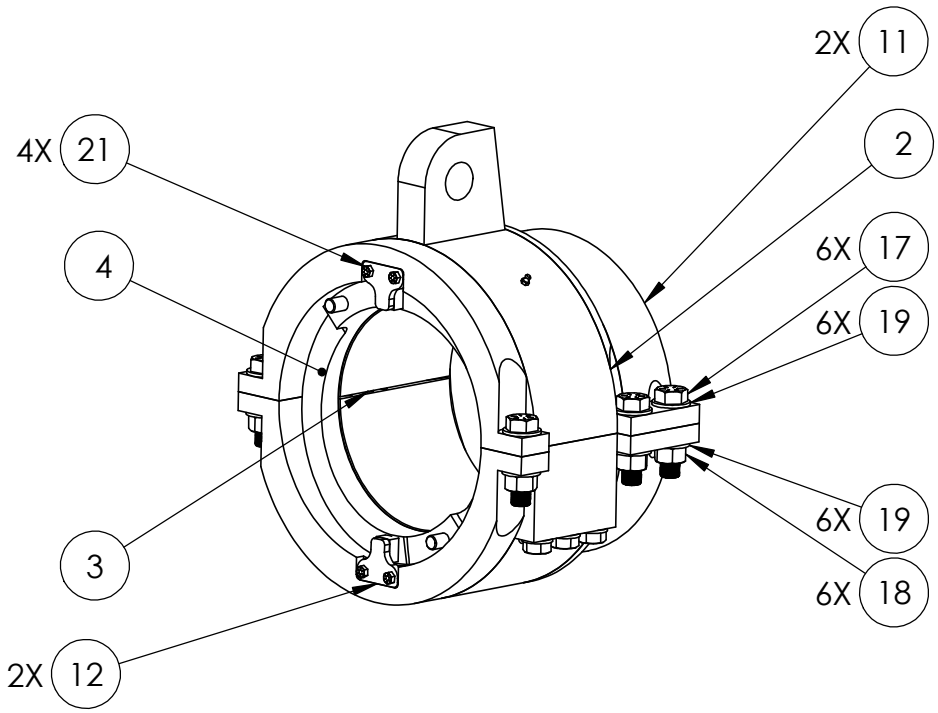

ADJUSTER-42
(PN UPL-42-1)

ITEM NO.	-5 REQD	-4 REQD	-3 REQD	-2 REQD	-1 REQD	DAI	PART NO.	DESCRIPTION	MATERIAL	MATERIAL SPEC & NO.
22			2			0KVE6	98380A702	PIN	.375 X 2.00	SS
21					4	0KVE6	92620A655	BOLT	.375-28UNF X 1.00	GR 8
20			4			0KVE6	9657K367	SPRING, COMPRESSION		
19					12	0KVE6	90126A038	WASHER		
18					6	0KVE6	94895A855	HEX NUT		GR 8
17					6	0KVE6	91257A989	BOLT	1.00-14UNF X 4.00	GR 8
16		2				0KVE6	98381A843	PIN	.750 X 2.00	SS
15				6		0KVE6	90126A037	WASHER		
14				6		0Z629	67511964	BOLT	.875-14UNF X 6.00	GRADE L9
13				1		0KVE6	1103K31	ZERK, GREASE		
12					2		-12	SHELL LOCK		
11					2		-11	SHELL HALF		
10		1					-10	LOCKING RING		
9			2				-9	WEDGE HALF		
8				1			-8	LOOP BOTTOM		
7	1						-7	LOOP LOOP		
6	1						-6	LOOP TOP		
5				1			-5	LOOP TOP WELDMENT		
4					1		-4	LOCKING RING ASSY		
3					1		-3	COLLET-WEDGE ASSY		
2					1		-2	LOOP ASSY		
1							UPL-42-1	ADJUSTER-42		

PARTS LIST

NC STATE UNIVERSITY

NORTH CAROLINA STATE UNIVERSITY
P.O. BOX 7801, Raleigh, North Carolina

UNLESS OTHERWISE SPECIFIED DIMENSIONS ARE IN INCHES
TOLERANCES ARE:
FRACTIONS ±1/32 DECIMALS .XX± .01 .XXX± .005 ANGLES ± .5°

DRAWN: KJTIERNEY
DATE: 4 APR 2016

ADJUSTER 42

SHEET 1 OF 9
MATERIAL: NONE
SCALE: 1 : 10
SIZE A
DWG. NO. **UPL 42-1**
REV.

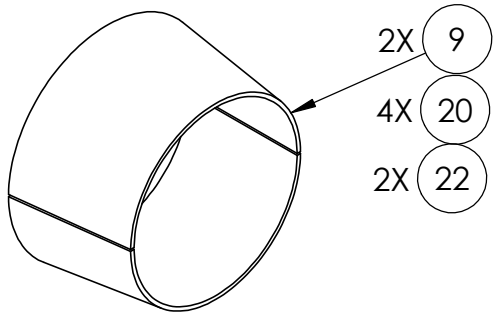

-3 COLLET-WEDGE ASSEMBLY

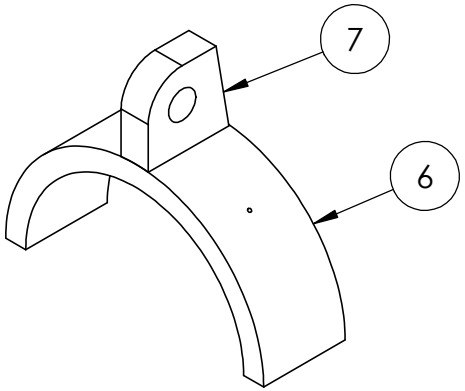

-5 LOOP TOP WELDMENT

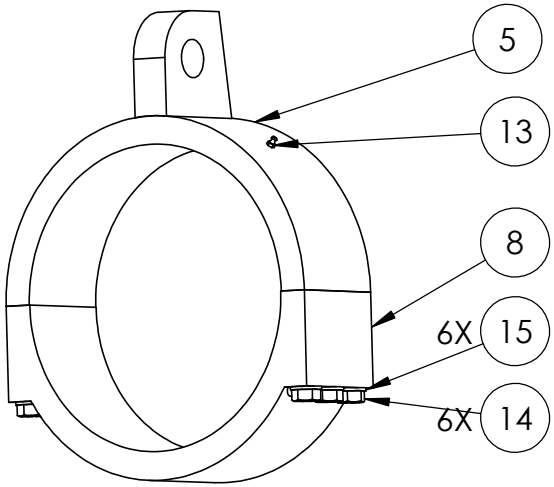

-2 LOOP ASSEMBLY

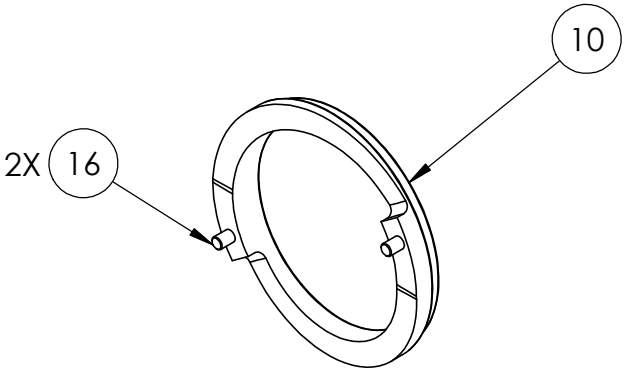

-4 LOCKING RING ASSEMBLY

SEE SHEET 1 FOR NOTES AND PARTS LIST

NC STATE UNIVERSITY	UNLESS OTHERWISE SPECIFIED DIMENSIONS ARE IN INCHES TOLERANCES ARE: FRACTIONS ±1/32 DECIMALS .XX ± .01 .XXX ± .005 ANGLES ± .5°	KJTIERNEY DRAWN	4 APR 2016 DATE	ADJUSTER 42
NORTH CAROLINA STATE UNIVERSITY P.O. BOX 7801, Raleigh, North Carolina	SHEET 2	MATERIAL NONE	SCALE 1 : 10	SIZE A DWG. NO. UPL 42-1 REV.

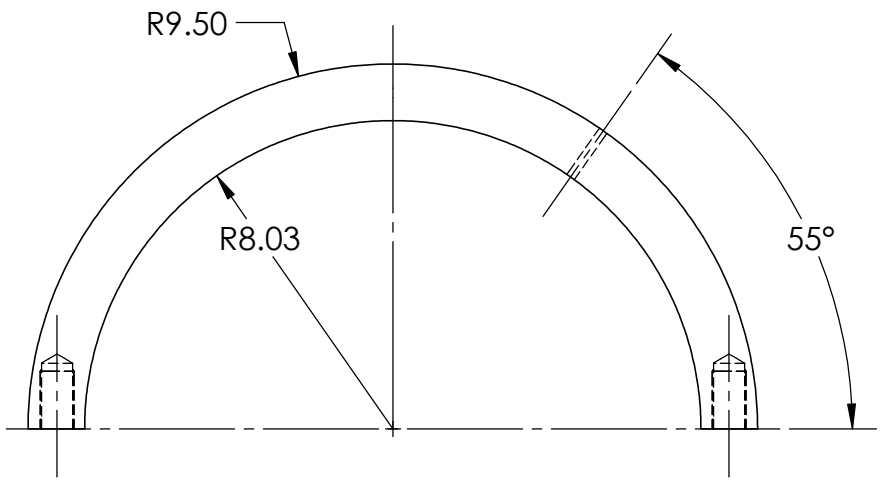

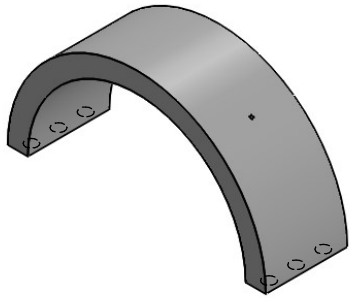

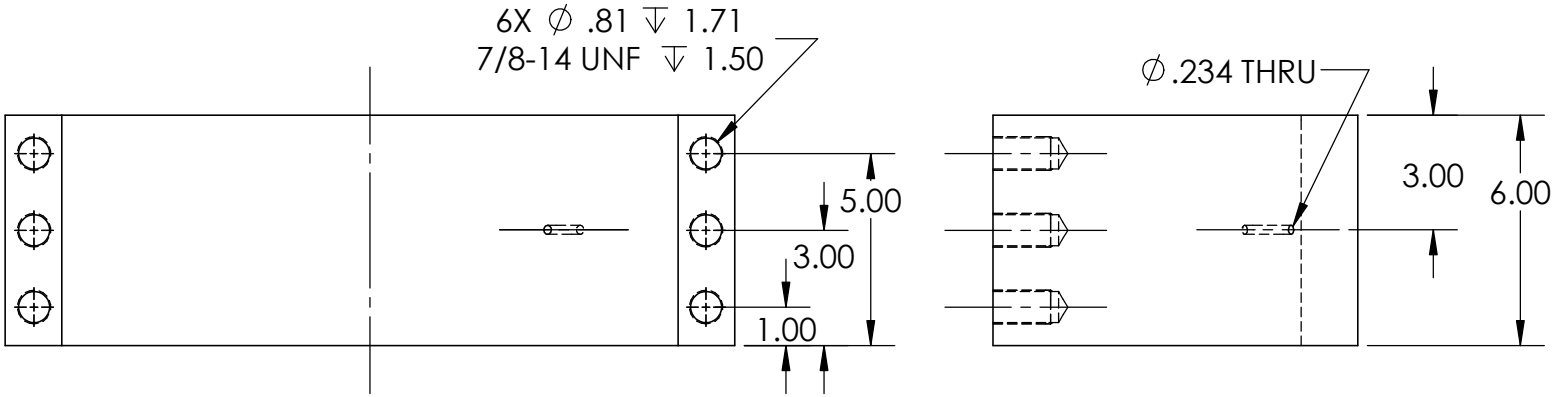

-6 LOOP TOP

5.

SEE SHEET 1 FOR NOTES AND PARTS LIST

NC STATE UNIVERSITY *NORTH CAROLINA STATE UNIVERSITY* P.O. BOX 7801, Raleigh, North Carolina	UNLESS OTHERWISE SPECIFIED DIMENSIONS ARE IN INCHES TOLERANCES ARE: FRACTIONS ±1/32 DECIMALS .XX± .01 .XXX± .005 ANGLES ± .5°	KJTIERNEY DRAWN	4 APR 2016 DATE	**ADJUSTER 42**
	SHEET 3	MATERIAL 4130 STL	SCALE 1 : 5	SIZE A DWG. NO. **UPL 42-1** REV.

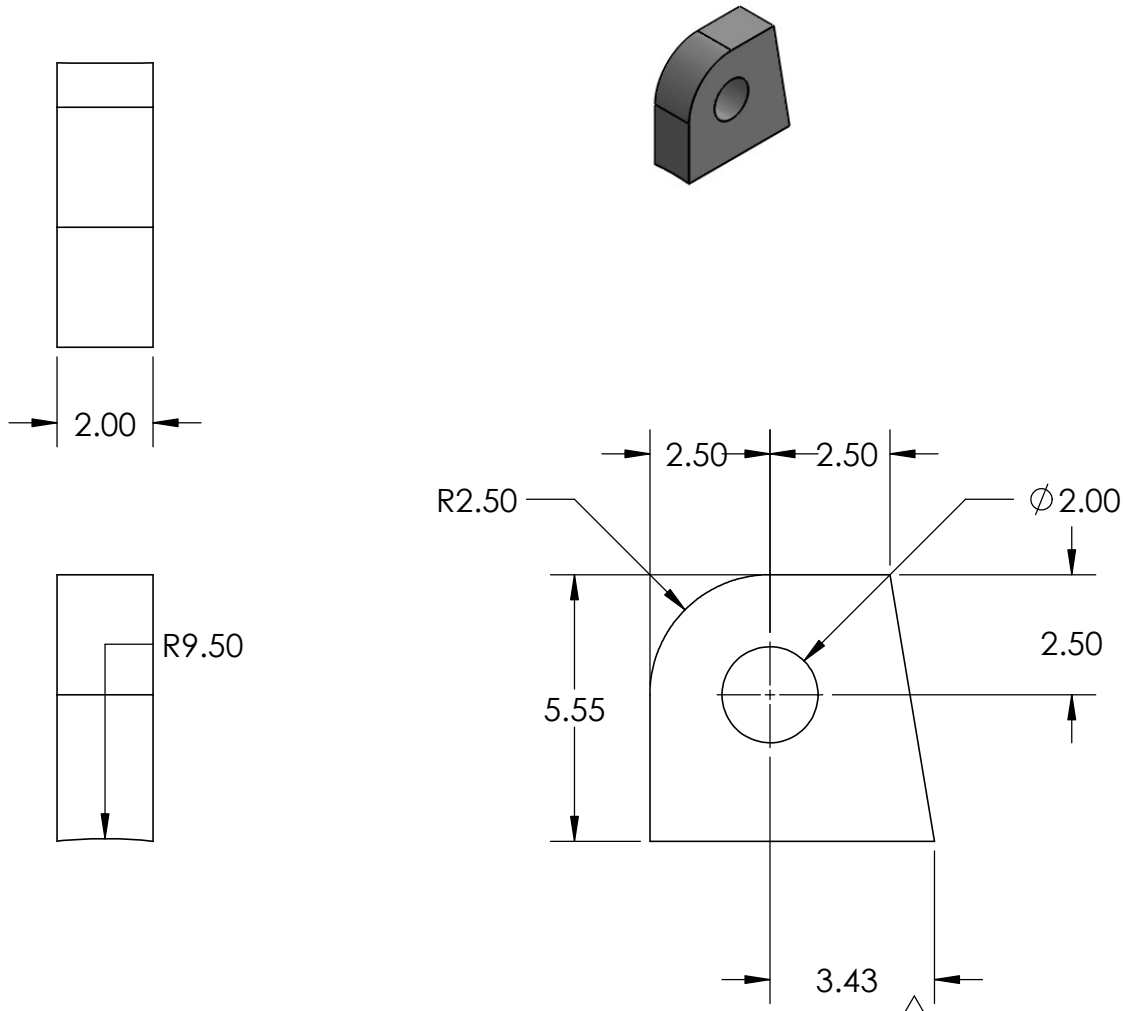

-7 LOOP LOOP 5.

SEE SHEET 1 FOR NOTES AND PARTS LIST

NC STATE UNIVERSITY	UNLESS OTHERWISE SPECIFIED DIMENSIONS ARE IN INCHES TOLERANCES ARE: FRACTIONS ±1/32 DECIMALS .XX± .01 .XXX± .005 ANGLES ± .5°	KJTIERNEY DRAWN	4 APR 2016 DATE	**ADJUSTER 42**
NORTH CAROLINA STATE UNIVERSITY P.O. BOX 7801, Raleigh, North Carolina	SHEET 4	MATERIAL 4130 STL	SCALE 1 : 4	SIZE A DWG. NO. **UPL 42-1** REV.

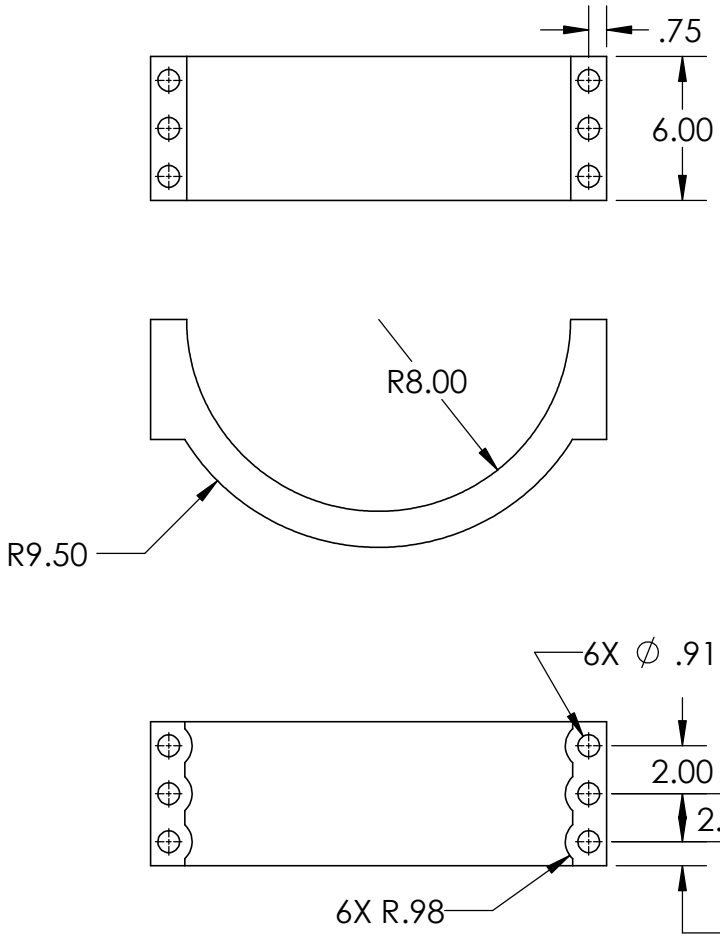

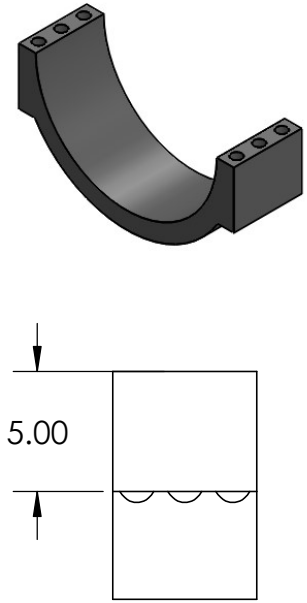

-8 LOOP BOTTOM 5.

SEE SHEET 1 FOR NOTES AND PARTS LIST

NC STATE UNIVERSITY	UNLESS OTHERWISE SPECIFIED DIMENSIONS ARE IN INCHES TOLERANCES ARE: FRACTIONS ±1/32 DECIMALS .XX± .01 .XXX± .005 ANGLES ± .5°	KJTIERNEY DRAWN	4 APR 2016 DATE	**ADJUSTER 42**
NORTH CAROLINA STATE UNIVERSITY P.O. BOX 7801, Raleigh, North Carolina	SHEET 5	MATERIAL 4130 STL	SCALE 1 : 8	SIZE A DWG. NO. **UPL 42-1** REV.

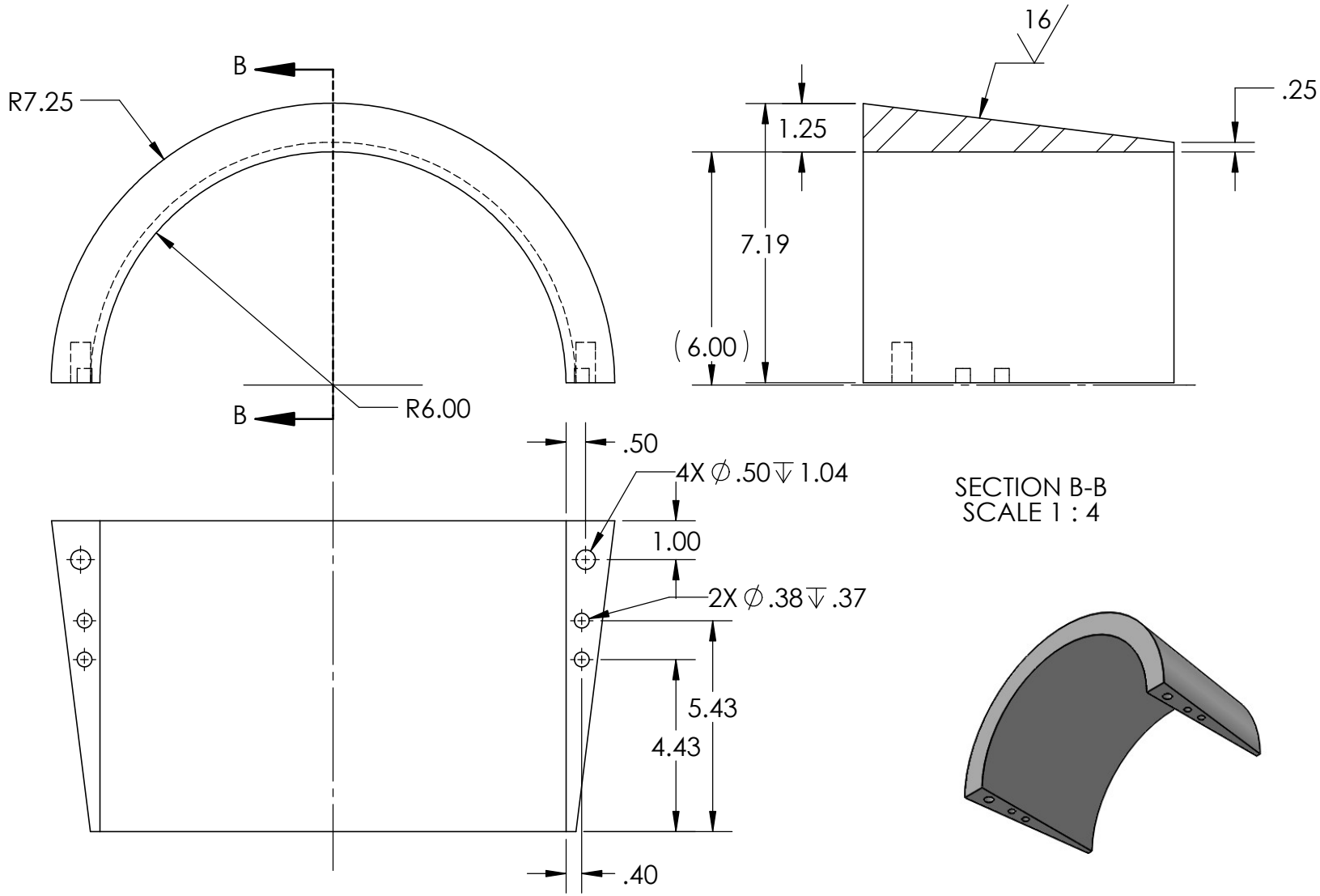

-9 WEDGE HALF

SEE SHEET 1 FOR NOTES AND PARTS LIST

NC STATE UNIVERSITY	UNLESS OTHERWISE SPECIFIED DIMENSIONS ARE IN INCHES TOLERANCES ARE: FRACTIONS ±1/32 DECIMALS .XX ± .01 .XXX ± .005 ANGLES ± .5°	KJTIERNEY DRAWN	4 APR 2016 DATE	**ADJUSTER 42**
NORTH CAROLINA STATE UNIVERSITY P.O. BOX 7801, Raleigh, North Carolina	SHEET 6	MATERIAL 440C SS	SCALE 1 : 4	SIZE A DWG. NO. **UPL 42-1** REV.

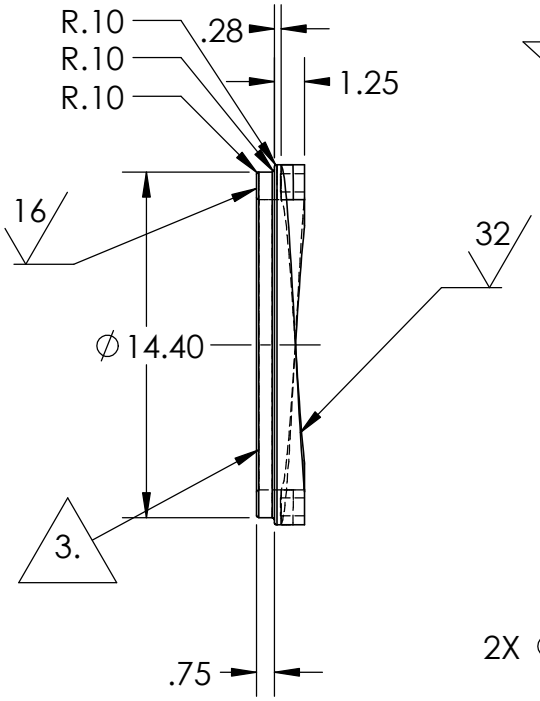

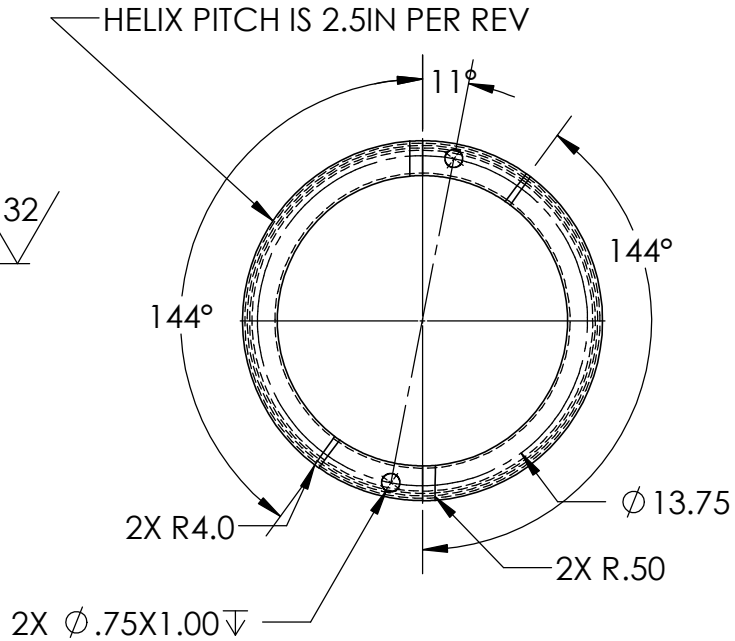

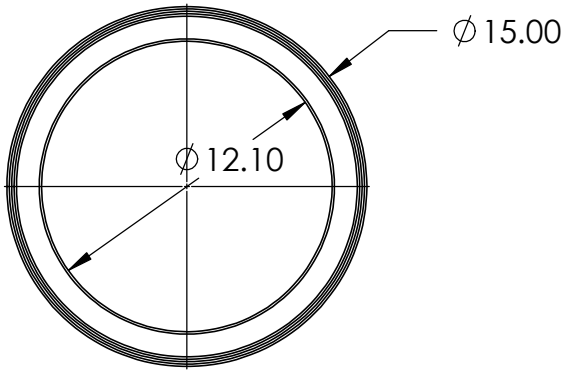

-10 LOCKING RING

SEE SHEET 1 FOR NOTES AND PARTS LIST

NC STATE UNIVERSITY	UNLESS OTHERWISE SPECIFIED DIMENSIONS ARE IN INCHES TOLERANCES ARE: FRACTIONS ±1/32 DECIMALS .XX± .01 .XXX± .005 ANGLES ± .5°	KJTIERNEY DRAWN	4 APR 2016 DATE	**ADJUSTER 42**
NORTH CAROLINA STATE UNIVERSITY P.O. BOX 7801, Raleigh, North Carolina	SHEET 7	MATERIAL 1020 STEEL	SCALE 1 : 8	SIZE A DWG. NO **UPL 42-1** REV.

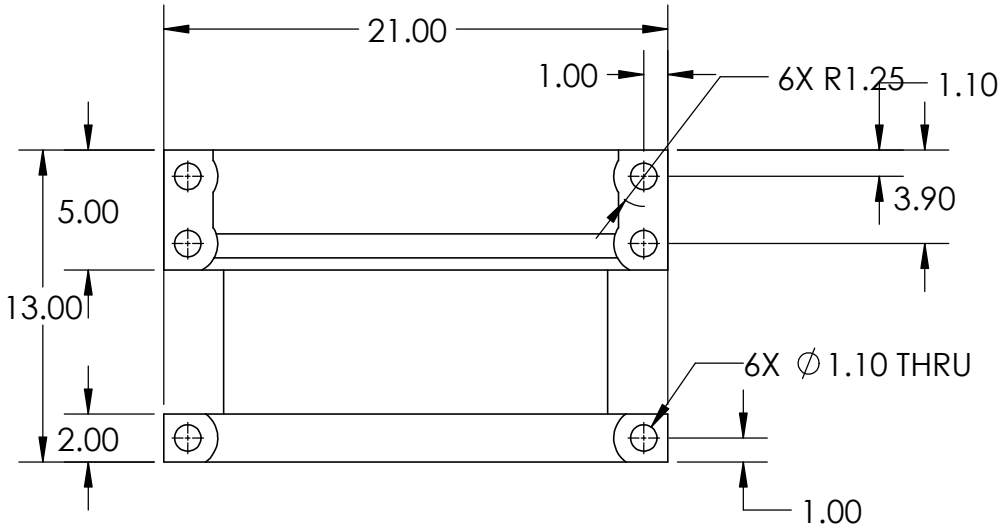

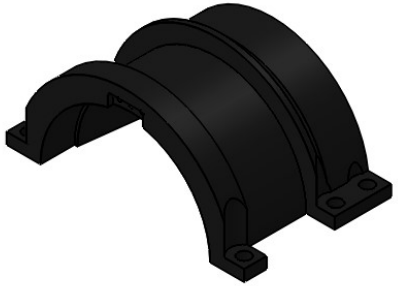

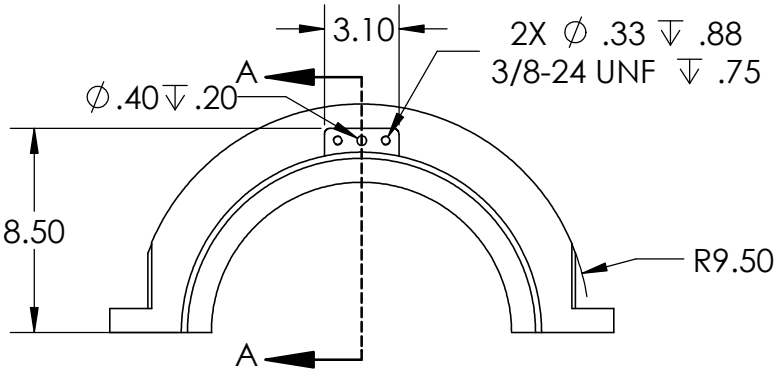

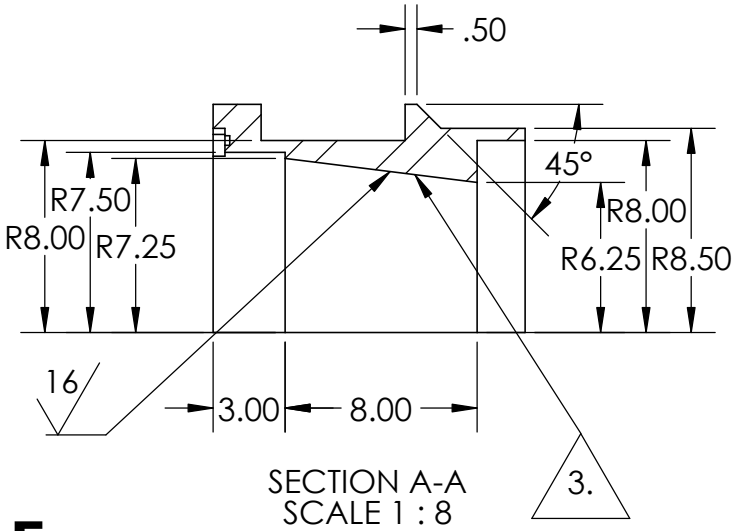

SECTION A-A
SCALE 1 : 8

-11 SHELL HALF

SEE SHEET 1 FOR NOTES AND PARTS LIST

NC STATE UNIVERSITY	UNLESS OTHERWISE SPECIFIED DIMENSIONS ARE IN INCHES TOLERANCES ARE: FRACTIONS ±1/32 DECIMALS .XX± .01 .XXX± .005 ANGLES ± .5°	KJTIERNEY DRAWN	4 APR 2016 DATE	**ADJUSTER 42**
NORTH CAROLINA STATE UNIVERSITY P.O. BOX 7801, Raleigh, North Carolina	SHEET 8	MATERIAL 4130 STL	SCALE 1 : 8	SIZE A DWG. NO. **UPL 42-1** REV.

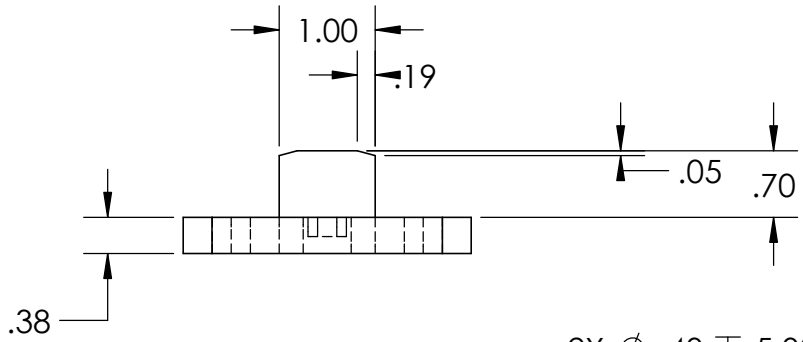

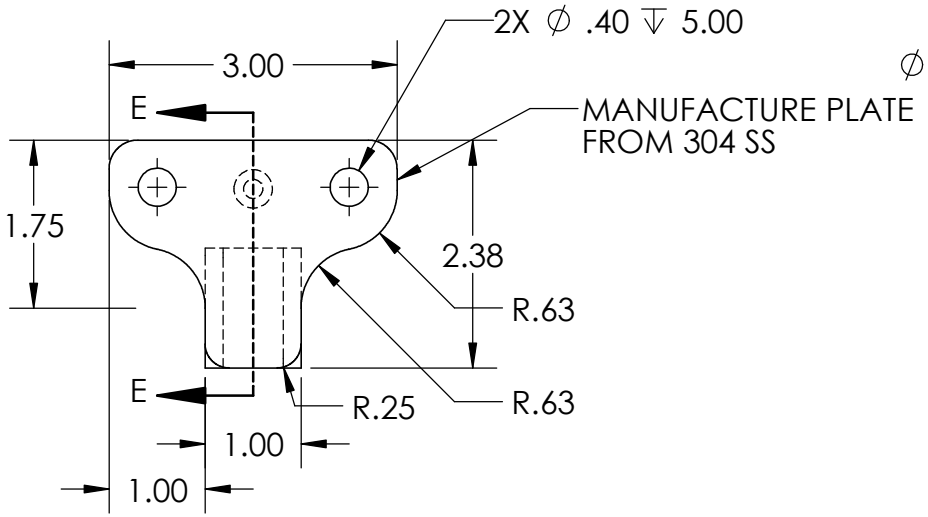

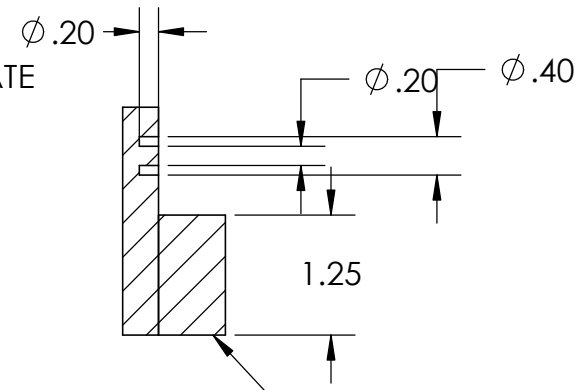

SECTION E-E
SCALE 1 : 2

MANUFACTURE FROM NYLON 6/6
P/N(0KVE6)92620A655 OR SIMILAR
AND BOND WITH 3M DP8005 HIGH
STRENGTH ACRYLIC ADHEASIVE
OR EQUIVILENT

-12 SHELL LOCK

SEE SHEET 1 FOR NOTES AND PARTS LIST

NC STATE UNIVERSITY	UNLESS OTHERWISE SPECIFIED DIMENSIONS ARE IN INCHES TOLERANCES ARE: FRACTIONS ±1/32 DECIMALS .XX± .01 .XXX± .005 ANGLES ± .5°	KJTIERNEY DRAWN	4 APR 2016 DATE	ADJUSTER 42
NORTH CAROLINA STATE UNIVERSITY P.O. BOX 7801, Raleigh, North Carolina	SHEET 9	MATERIAL NONE	SCALE 1 : 2	SIZE A DWG. NO. UPL 42-1 REV.

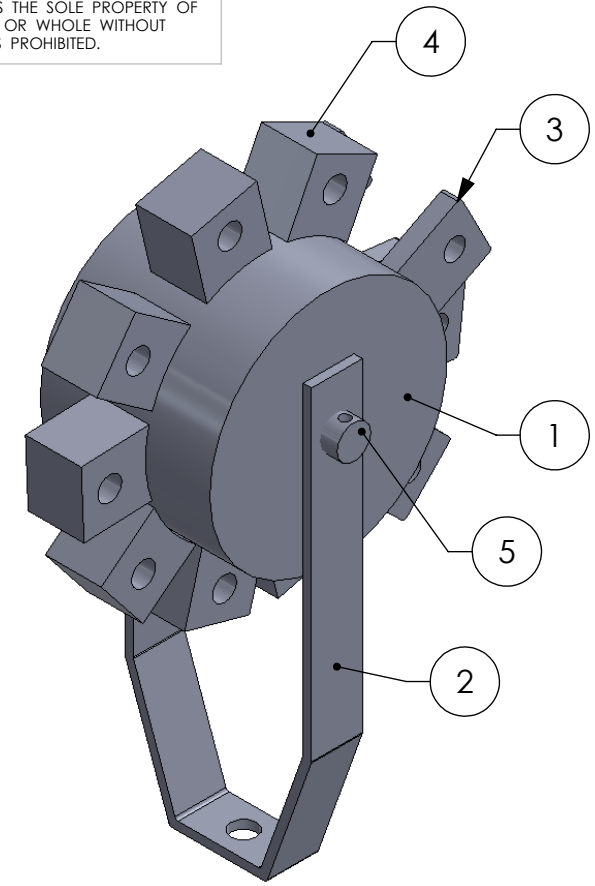

NOTES:

1. TABS ARE WELDED ON WITH A WELD HAVING A MINIMUM ULTIMATE TENSILE STRENGTH OF 16,254 PSI (FOR 5:1)

PIN ADAPTER-1

ITEM NO.	-5 REQD	-4 REQD	-3 REQD	-2 REQD	-1 REQD	DAI	PART NO.	DESCRIPTION	MATERIAL	MATERIAL SPEC
5					1		-6	CENTER PIN	ALUMINUM 2219	
4					9		-5	INNER TAB	ALUMINUM 2219	
3					3		-4	OUTER TAB	ALUMINUM 2219	
2					1		-3	SUPPORT	1030 STEEL	
1					1		-2	CENTER	ALUMINUM 2219	
							PIN ADAPTER-1	PIN ADAPTER		

PARTS LIST

NORTH CAROLINA STATE UNIVERSITY
P.O. BOX 7801, Raleigh, North Carolina

UNLESS OTHERWISE SPECIFIED
DIMENSIONS ARE IN MILLIMETERS
TOLERANCES ARE:
FRACTIONS + .XX+ .XX + 1
.XXX+.XXX

DRAWN: SEJONES	DATE: 4 APR 2016	**PIN ADAPTER**
MATERIAL: NONE	SCALE: 1 : 4	SIZE A · DWG. NO. **PIN ADAPTER-1** · REV.

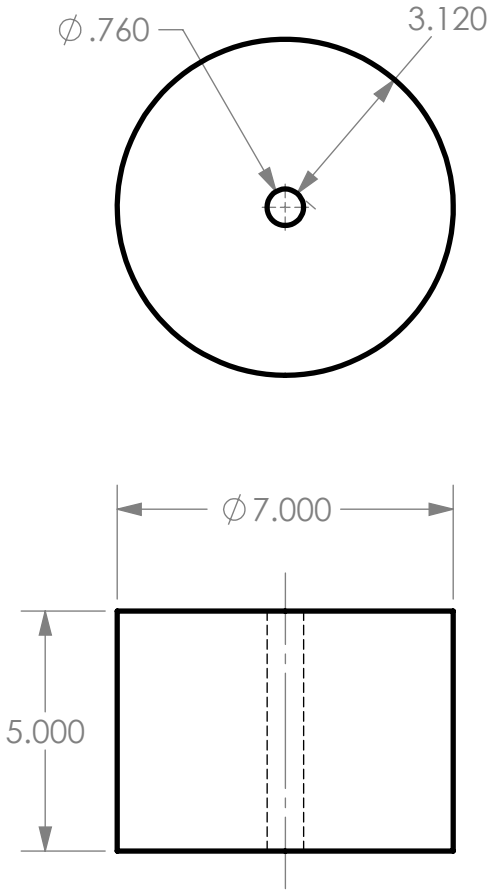

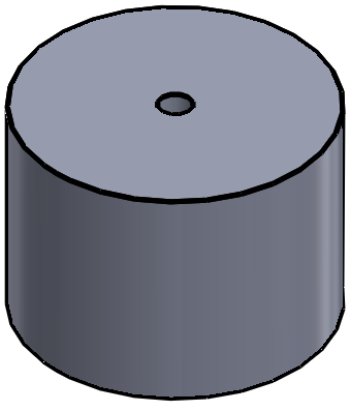

NORTH CAROLINA STATE UNIVERSITY P.O. BOX 7801, Raleigh, North Carolina	UNLESS OTHERWISE SPECIFIED DIMENSIONS ARE IN MILLIMETERS TOLERANCES ARE: FRACTIONS + DECIMALS .XX+ .XX .XXX+.XXX ANGLES + 1	SEJONES DRAWN	4 APR 2016 DATE	**CENTER**
		MATERIAL ALUMINUM 2219	SCALE 1 : 4	SIZE A · DWG. NO. **PIN ADAPTER-2** · REV.

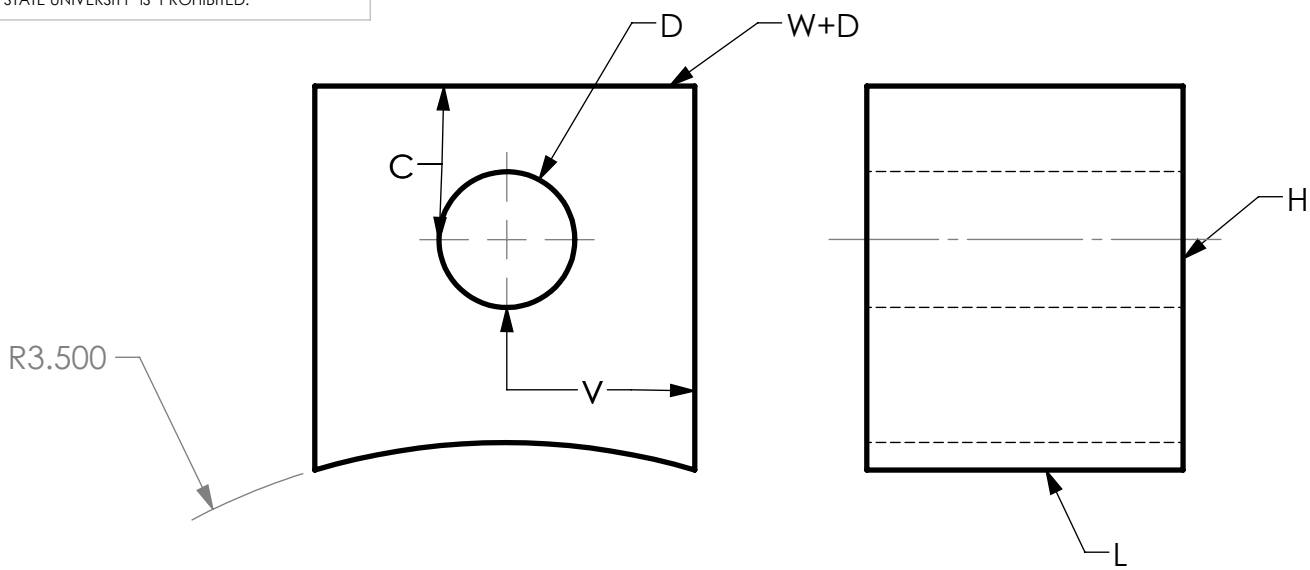

Inner Tabs

S/N	Pin Diameter (in) D	Length (in) L	Load (lbs) F	Tearout (in)	F/A (psi)	Tab Area (in^2)	Width (in) W	Bearing Stress (psi)	Safety Factor (Ultimate)	Tab Height (in) H	Distance from hole center to top (in) C	Distance from hole center to edge (in) V
65720-700787-041	0.64	1.277	1,000	0.96	783	1.277	1	-779	77.03	1.9	1.28	0.82
T101897	0.625	0.76	3,867	0.94	5,088	0.76	1	-5,182	11.58	1.8	1.25	0.8125
T101610	0.563	0.18	940	0.84	5,222	0.18	1	-5,905	10.16	1.7	1.126	0.7815
65720-70005-041	0.453	0.88	850	0.68	966	0.88	1	-1,357	44.20	1.4	0.906	0.7265
CPWA30804	0.437	0.625	1,000	0.66	1,600	0.625	1	-2,331	25.74	1.3	0.874	0.7185
6798116	0.4	0.255	1,000	0.60	3,922	0.255	1	-6,241	9.61	1.3	0.8	0.7
70700-77408-046	0.312	2.507	1,300	0.47	519	2.507	1	-1,058	56.71	1.0	0.624	0.656
6797692	0.311	0.640625	4,000	0.47	6,244	0.640625	1	-12,781	4.69	1.0	0.622	0.6555
65700-70020-041	0.261	1.647	900	0.39	546	1.647	1	-1,333	45.02	0.9	0.522	0.6305

NORTH CAROLINA STATE UNIVERSITY
P.O. BOX 7801, Raleigh, North Carolina

UNLESS OTHERWISE SPECIFIED
DIMENSIONS ARE IN MILLIMETERS
TOLERANCES ARE:
FRACTIONS + | DECIMALS .XX+ .XX .XXX+.XXX | ANGLES + 1

DRAWN: SEJONES
DATE: 4 APR 2016
MATERIAL: ALUMINUM 2219
SCALE: N/A

INNER TAB

SIZE A | DWG. NO. **PIN ADAPTER-4** | REV.

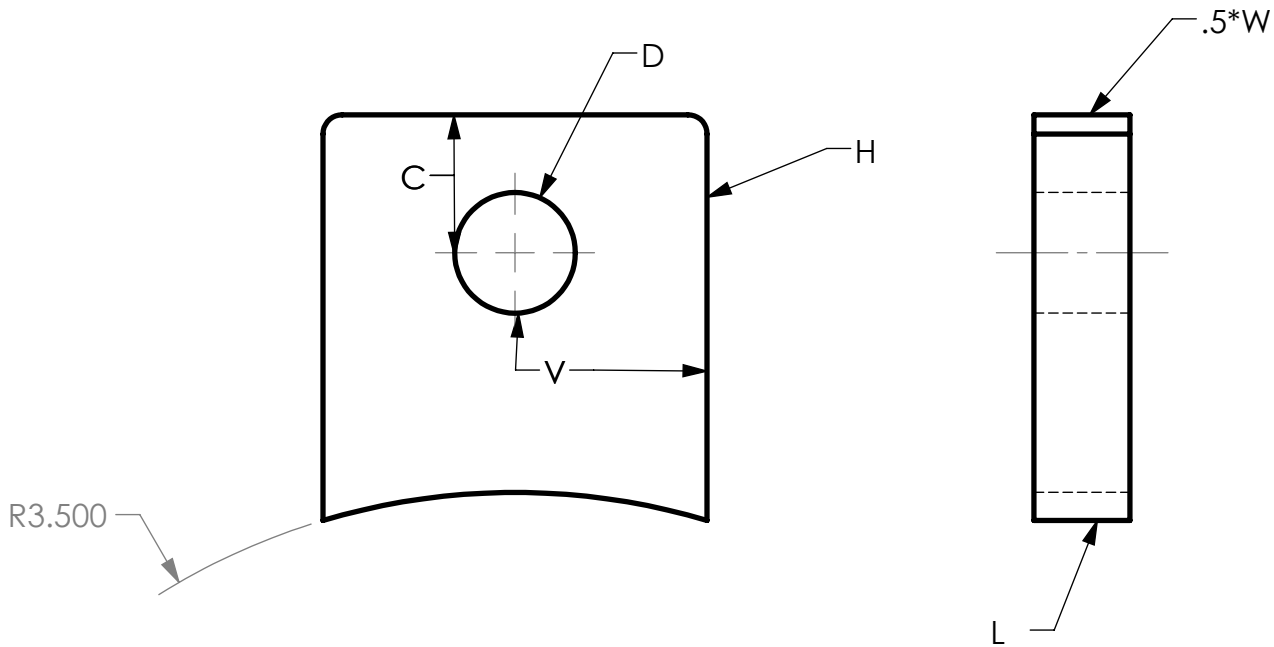

Outer Tabs

S/N	Pin Diameter (in) D	Distance b/t Tabs (in) B	Load (lbs) F	Tearout (in)	F/A (psi)	Length (in) L	Width (in)	Bearing Stress (psi)	Safety Factor (Ultimate)	Tab Width (total) W	Tab Height (in) H	Hole Center to Top (in) C	Hole Center to Edge (in) V
S6170-70067-041	0.656	3.695	3,867	1.0	2,974	0.65	1	-2,886	20.79	1.7	1.9	1.312	0.828
T103124-101	0.5	1.5	1,800	0.8	1,385	0.65	1	-1,763	34.03	1.5	1.5	1	0.75
PE.17153	0.531	0.5	1,940	0.8	1,492	0.65	1	-1,789	33.54	1.5	1.6	1.062	0.7655

NORTH CAROLINA STATE UNIVERSITY
P.O. BOX 7801, Raleigh, North Carolina

UNLESS OTHERWISE SPECIFIED
DIMENSIONS ARE IN MILLIMETERS
TOLERANCES ARE:
FRACTIONS + | DECIMALS .XX+ .XX .XXX+.XXX | ANGLES + 1

DRAWN: SEJONES
DATE: 4 APR 2016
MATERIAL: ALUMINUM 2219
SCALE: 1 : 1

OUTER TAB

SIZE: A
DWG. NO. **PIN ADAPTER-4**
REV.

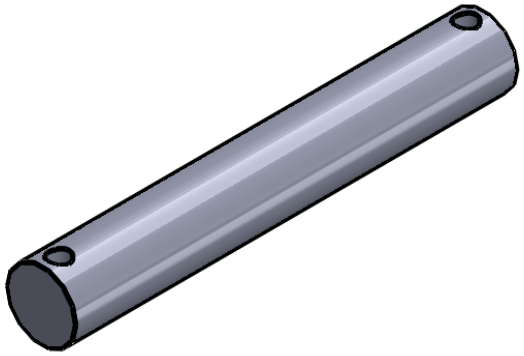

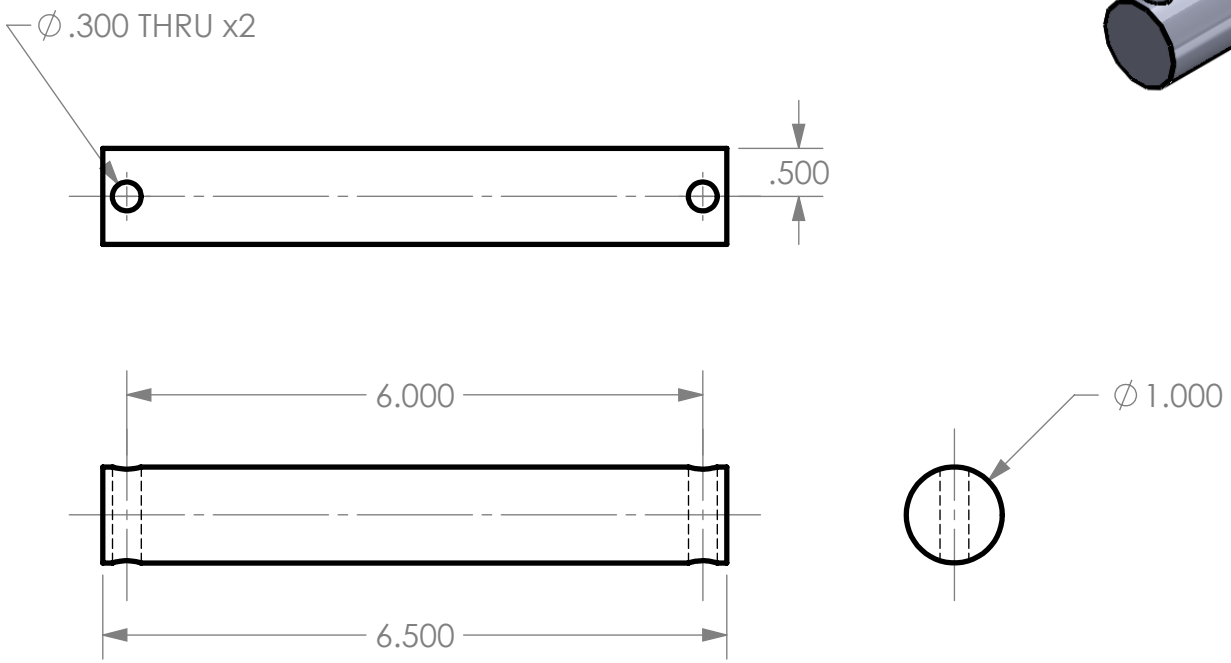

NORTH CAROLINA STATE UNIVERSITY P.O. BOX 7801, Raleigh, North Carolina	UNLESS OTHERWISE SPECIFIED DIMENSIONS ARE IN MILLIMETERS TOLERANCES ARE: FRACTIONS + DECIMALS .XX+ .XX .XXX+.XXX ANGLES + 1	SEJONES DRAWN	4 APR 2016 DATE	**CENTER PIN**
		MATERIAL ALUMINUM 2219	SCALE 1 : 2	SIZE A · DWG. NO. **PIN ADAPTER-5** · REV.

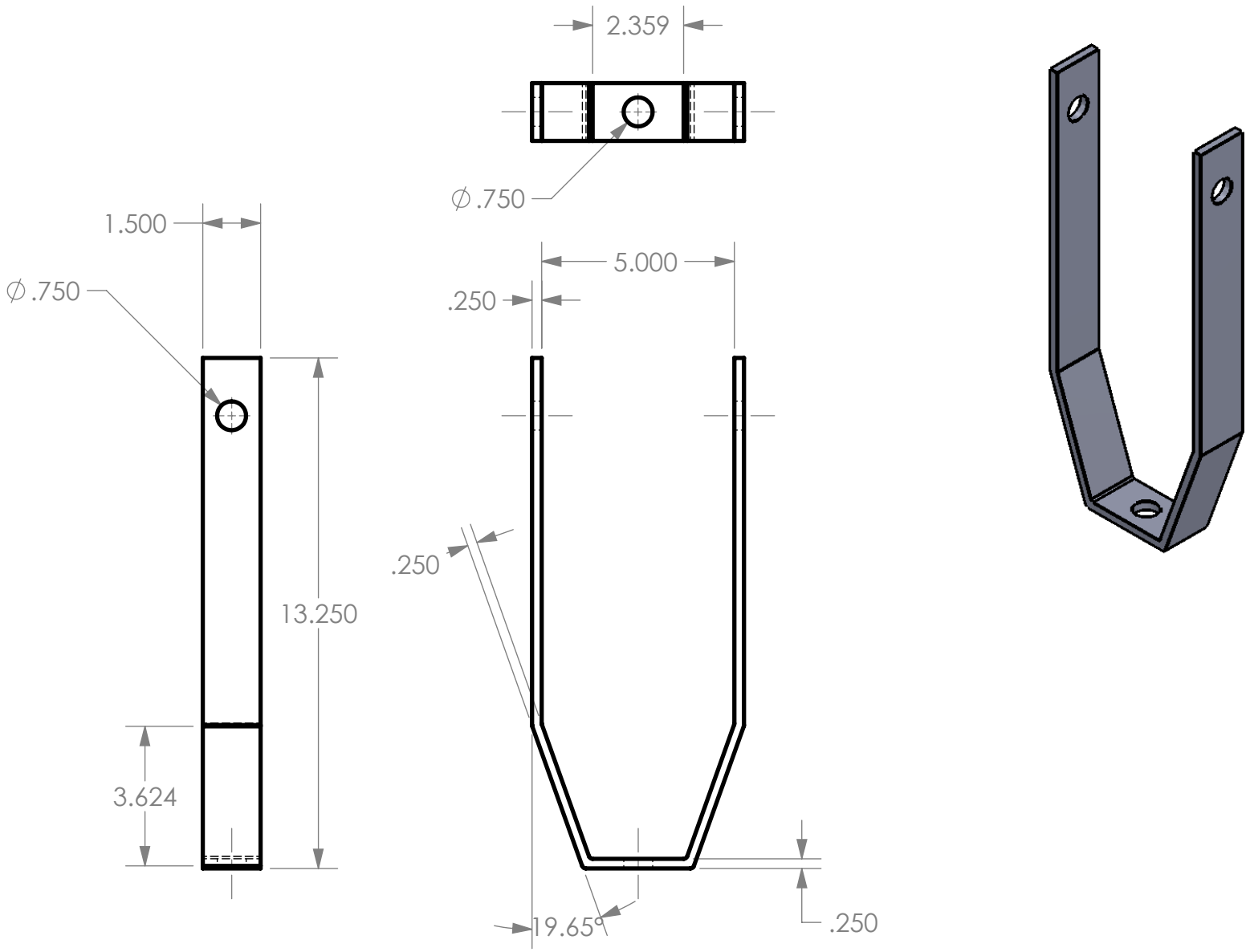

NORTH CAROLINA STATE UNIVERSITY
P.O. BOX 7801, Raleigh, North Carolina

UNLESS OTHERWISE SPECIFIED
DIMENSIONS ARE IN MILLIMETERS
TOLERANCES ARE:
FRACTIONS + | DECIMALS .XX+ .XXX+.XXX | ANGLES .XX + 1

DRAWN: SEJONES	DATE: 4 APR 2016	**SUPPORT**	
MATERIAL: 1030 STEEL	SCALE: 1 : 4	SIZE A	DWG. NO. **PIN ADAPTER-3**	REV.

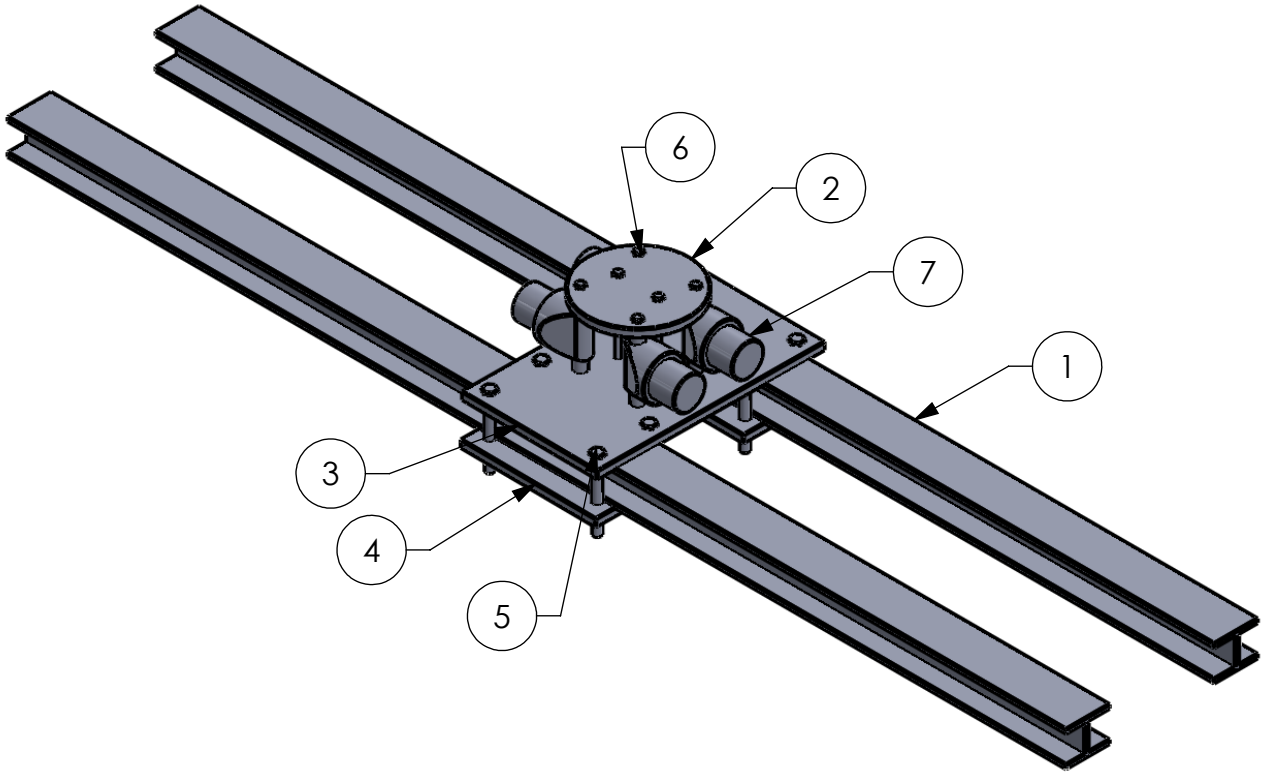

ITEM NO.	-5 REQD	-4 REQD	-3 REQD	-2 REQD	-1 REQD	DAI	PART NO.	DESCRIPTION	MATERIAL	MATERIAL SPEC
7					4		-8	TUBE ADAPTER		
6					6		-7	BOLT 1"-8x26"		GR 8
5					8		-6	BOLT 2"-4.5x20'		GR BD
4					2		-5	BOTTOM PLATE	4130 STEEL	
3					1		-4	MIDDLE PLATE	4340 STEEL	
2					1		-3	TOP PLATE	1025 STEEL	
1					2		-2	I-BEAM	1095 STEEL	W12x190
							CENTER-1	CENTER SUPPORT		

PARTS LIST

NORTH CAROLINA STATE UNIVERSITY
P.O. BOX 7801, Raleigh, North Carolina

UNLESS OTHERWISE SPECIFIED
DIMENSIONS ARE IN MILLIMETERS
TOLERANCES ARE:
FRACTIONS + | DECIMALS .XX+ .XX .XXX+.XXX | ANGLES + 1

DRAWN: SEJONES	DATE: 4 APR 2016	**CENTER SUPPORT**	
MATERIAL: NONE	SCALE: 1 : 40	SIZE A	DWG. NO. **CENTER-1**	REV.

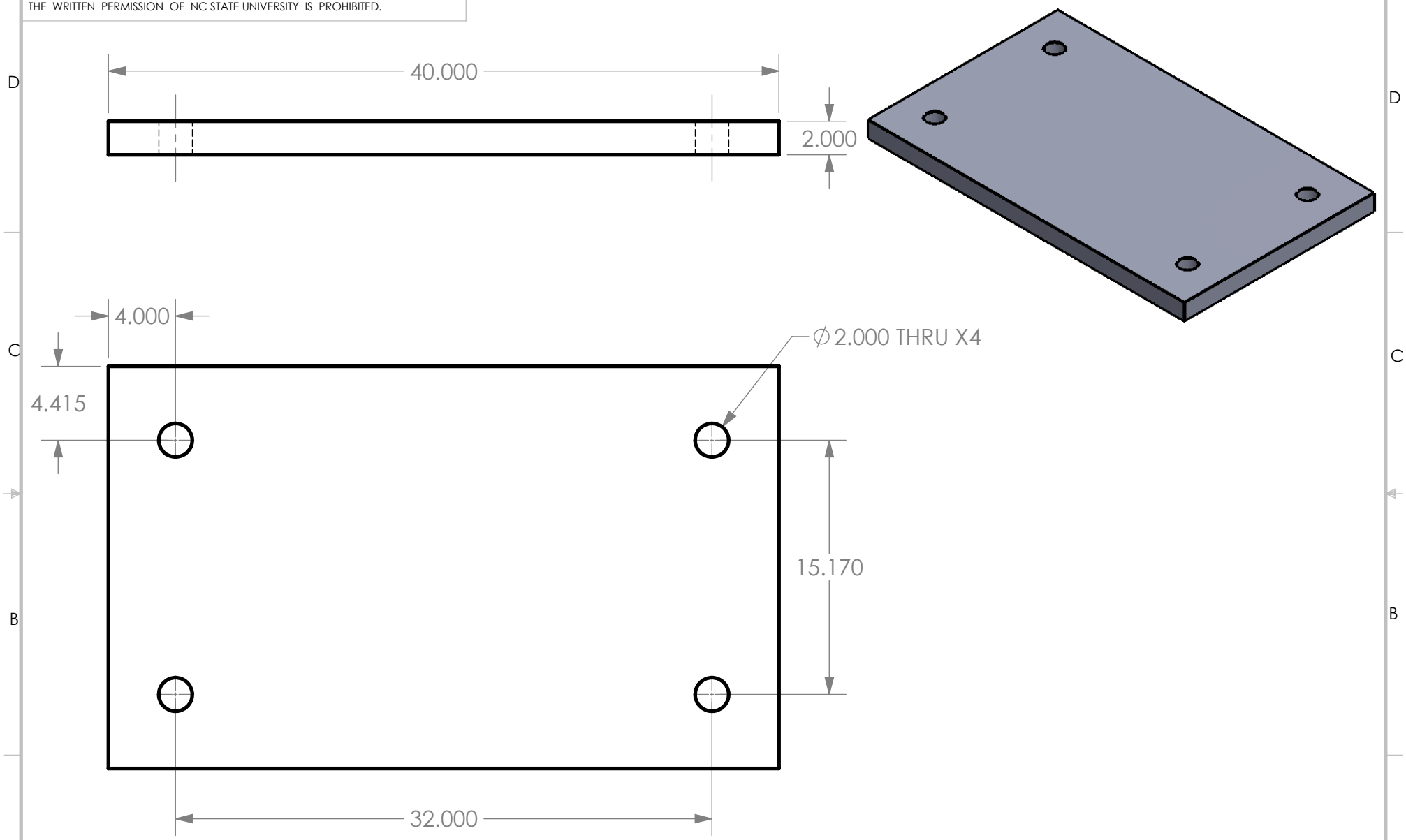

NORTH CAROLINA STATE UNIVERSITY P.O. BOX 7801, Raleigh, North Carolina	UNLESS OTHERWISE SPECIFIED DIMENSIONS ARE IN MILLIMETERS TOLERANCES ARE: FRACTIONS + DECIMALS .XX+ .XX .XXX+.XXX ANGLES + 1	SEJONES DRAWN	4 APR 2016 DATE	**BOTTOM PLATE**
		MATERIAL 4130 STEEL	SCALE 1 : 8	SIZE A · DWG. NO. **CENTER-5** · REV.

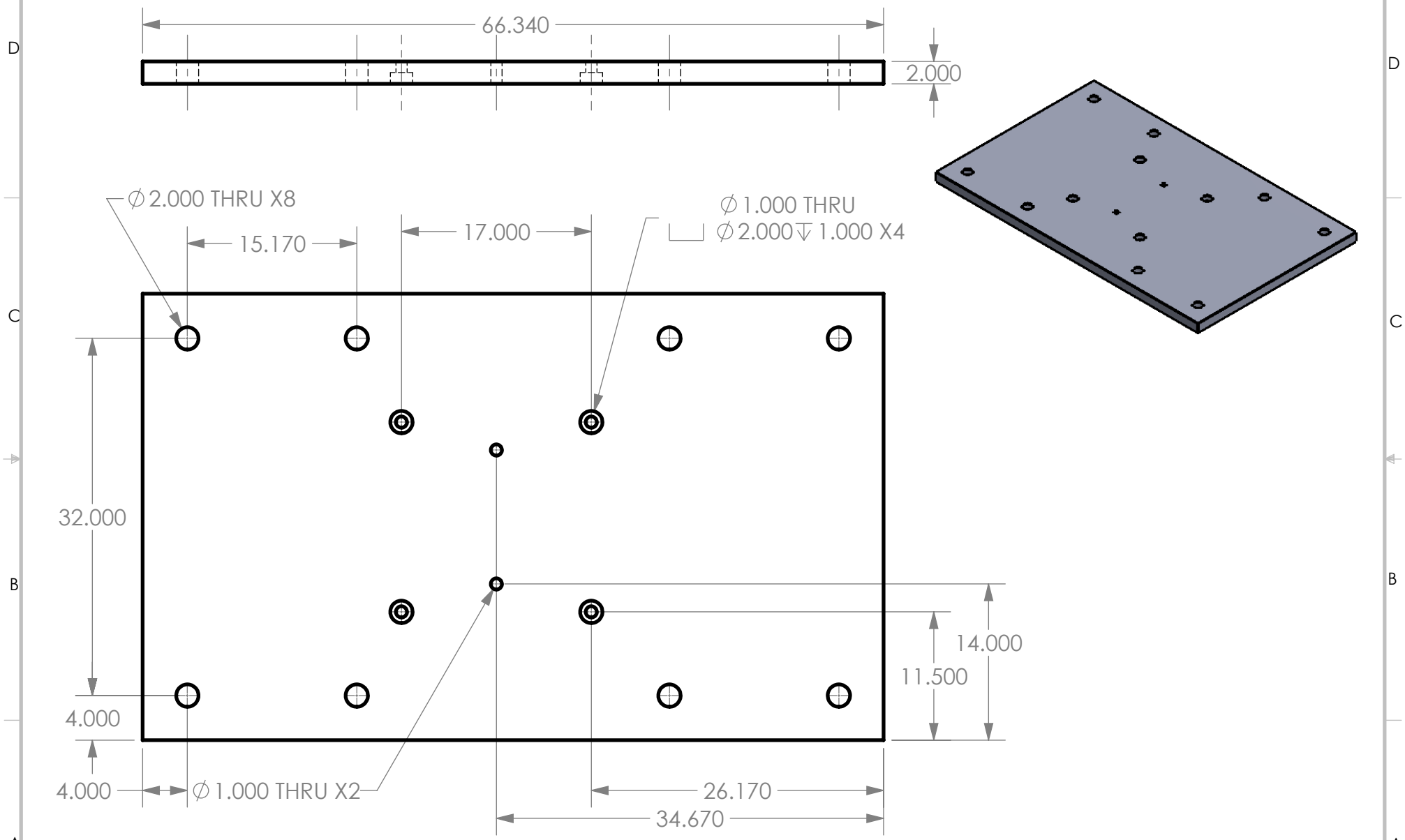

NORTH CAROLINA STATE UNIVERSITY
P.O. BOX 7801, Raleigh, North Carolina

UNLESS OTHERWISE SPECIFIED
DIMENSIONS ARE IN MILLIMETERS
TOLERANCES ARE:
FRACTIONS + | DECIMALS .XX+ .XX .XXX+.XXX | ANGLES + 1

DRAWN: SEJONES	DATE: 4 APR 2016	**MIDDLE PLATE**	
MATERIAL: 4340 STEEL	SCALE: 1 : 10	SIZE: A	DWG. NO. **CENTER-4**	REV.

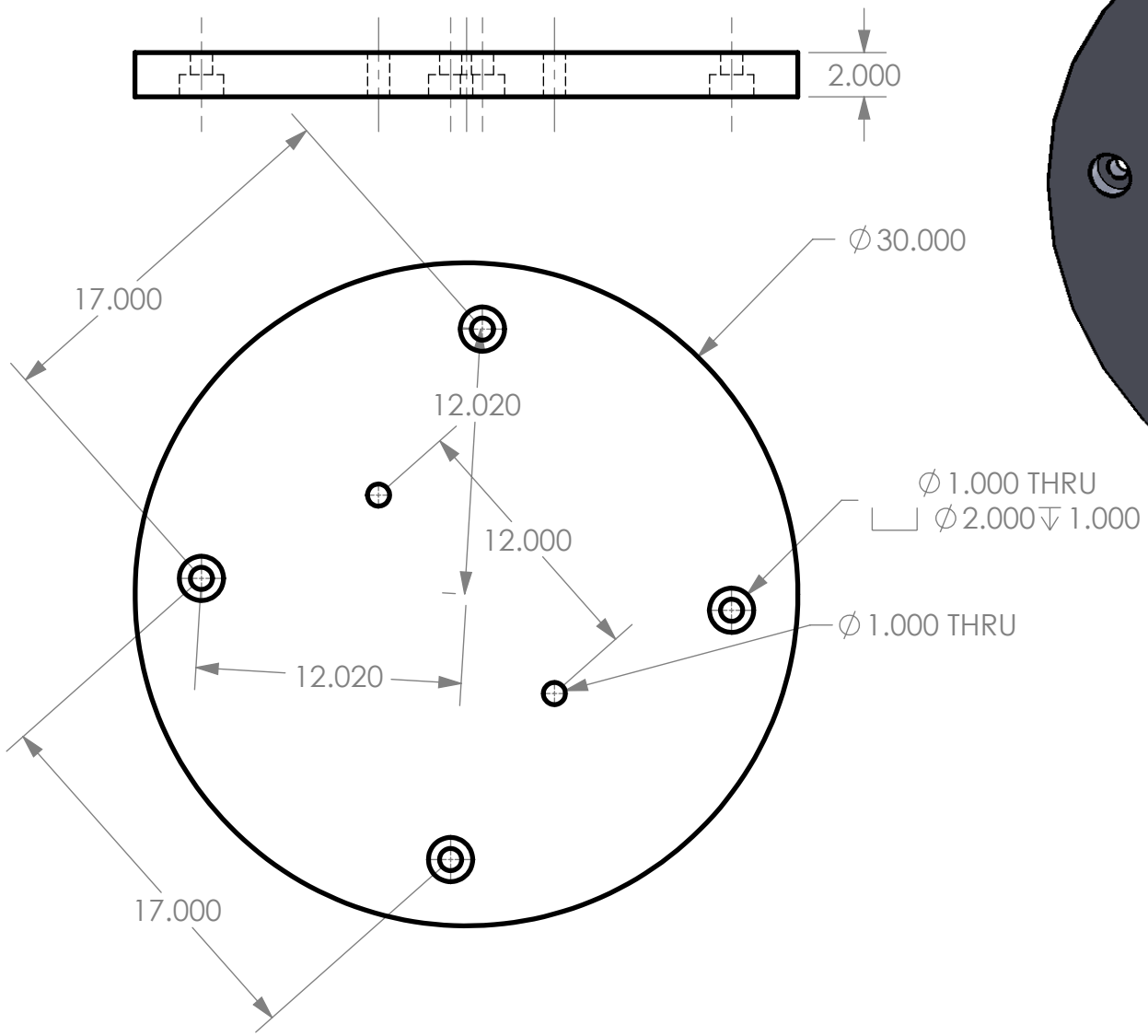

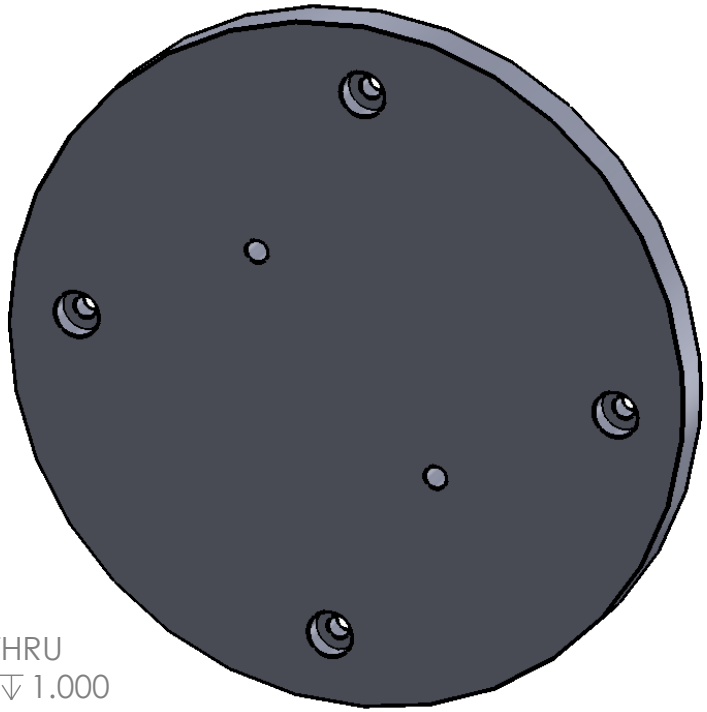

NORTH CAROLINA STATE UNIVERSITY P.O. BOX 7801, Raleigh, North Carolina	UNLESS OTHERWISE SPECIFIED DIMENSIONS ARE IN MILLIMETERS TOLERANCES ARE: FRACTIONS + DECIMALS .XX+ .XX .XXX+.XXX ANGLES + 1	DRAWN: SEJONES	DATE: 4 APR 2016	**TOP PLATE**
		MATERIAL: 1095 STEEL	SCALE: 1 : 8	SIZE A · DWG. NO. **CENTER-3** · REV.

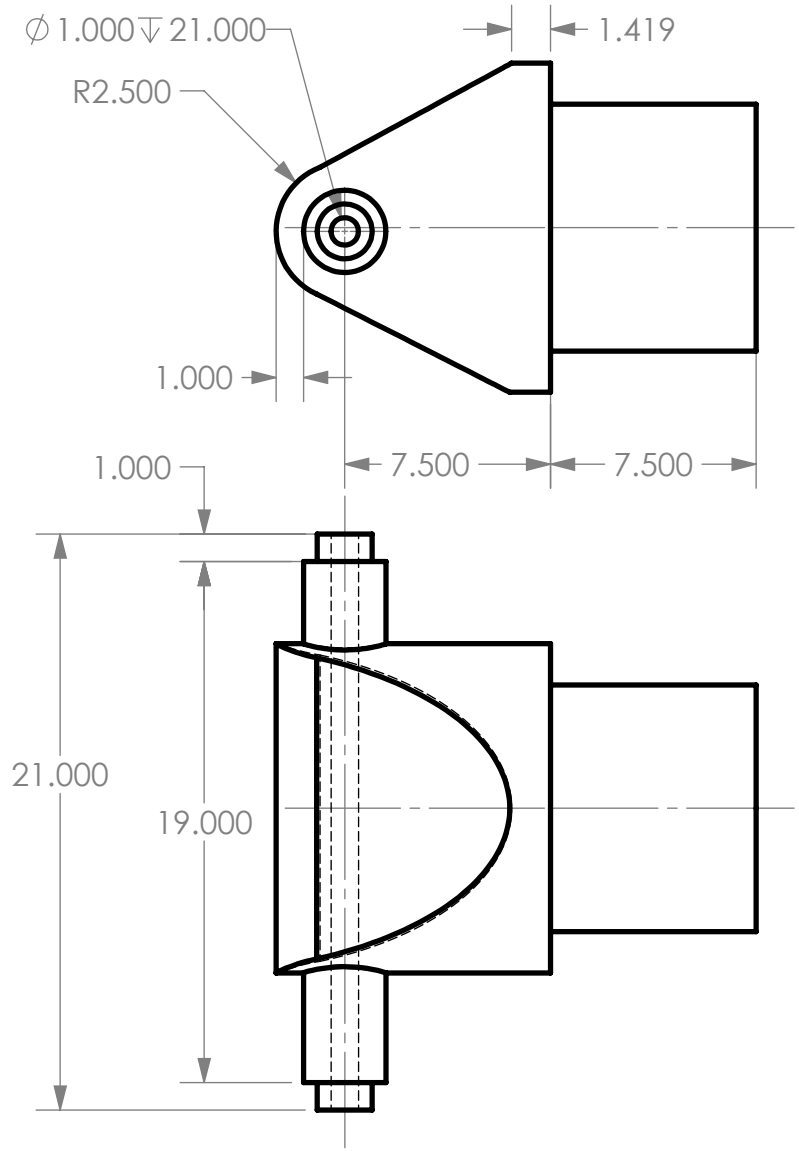

NOTE:

1. TUBE IS WELDED TO TUBE ADAPTER WITH ER70

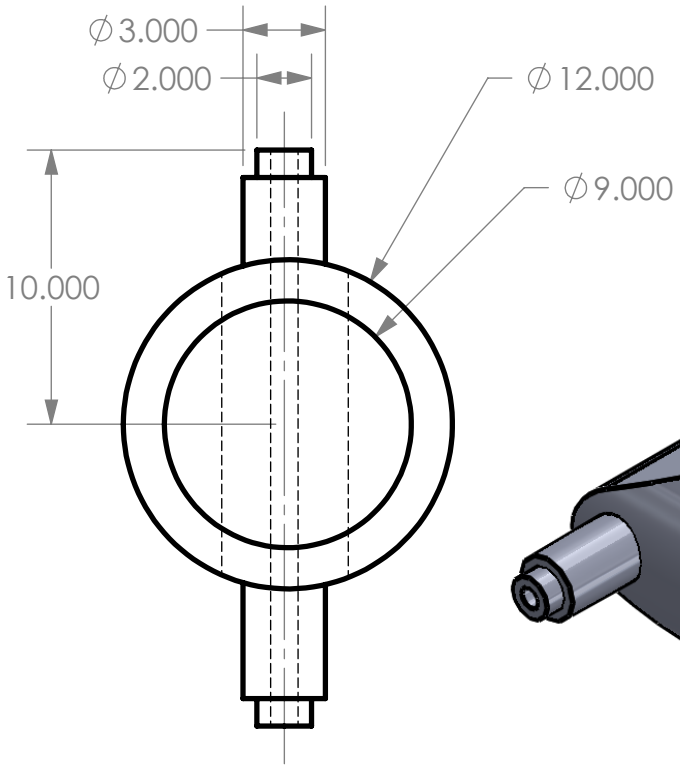

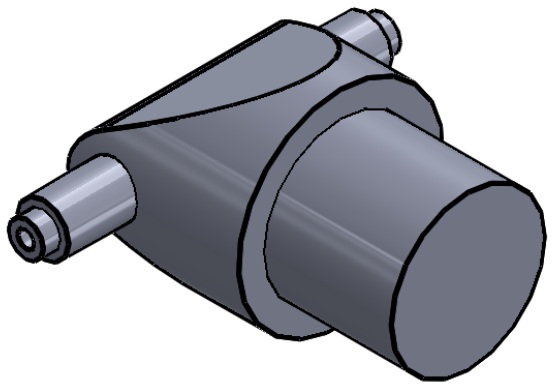

NORTH CAROLINA STATE UNIVERSITY P.O. BOX 7801, Raleigh, North Carolina	UNLESS OTHERWISE SPECIFIED DIMENSIONS ARE IN MILLIMETERS TOLERANCES ARE: FRACTIONS + DECIMALS .XX+ .XX .XXX+.XXX ANGLES + 1	SEJONES DRAWN	4 APR 2016 DATE	**TUBE ADAPTER**
		MATERIAL 1025 STEEL	SCALE 1 : 7	SIZE A · DWG. NO. **CENTER-8** · REV.

5. APPENDIX E. (Sling Database)

APPENDIX E
SLING DATABASE

Slings Worksheet 3.0

					Dimensions in inches							Connection 1			Connection 2			Connection 3			Connection 4			Connection 5			Connection 6		
Sling Part Number	Used On	SWL	Proofload	# of CXNs	L	W	H	Est?	Frame	Type of CXNs	Var. Config	X1	Y1	Z1	X2	Y2	Z2	X3	Y3	Z3	X4	Y4	Z4	X5	Y5	Z5	X6	Y6	Z6
	EA-6	64000	128000	4	57.55	77.72	170	No	Yes	Pin	No	38.9	28.8	0.0	38.9	-28.8	0.0	-38.9	28.8	0.0	-38.9	-28.8	0.0						
	H-53	50000	100000	4	140	84.6	122	Yes	Yes	Shackle	No	59.0	48.3	0.0	59.0	-36.3	0.0	-81.0	47.2	0.0	-81.0	-35.2	0.0						
	E-2C	48000	96000	6	450	296	204	Yes	Yes	Shackle	No	177.9	0.0	54.9	-11.0	147.9	66.4	-11.0	-147.9	66.4	-271.8	27.0	0.0	-271.8	-27.0	0.0			
	V-22	46300	92600	4	76	47.8		No	No	Pin	No	27.1	38.0	0.0	27.1	-38.0	0.0	-20.6	38.0	0.0	-20.6	-38.0	0.0						
	C-2A	44154	88308	3	191	196	130	No	Yes	Pin	No	176.3	7.1	0.0	-14.7	148.0	10.0	-14.7	-148.0	10.0									
	H-53	42000	84000	4	24	12.6	37.25	No	No	Bolted	No	12.7	0.0	0.0	-10.4	6.3	0.0	-10.4	6.3	0.0									
	H-53	40750	81500	3	28	32	43	No	Yes	Something Else	No	18.4	0.0	0.0	-9.2	15.9	0.0	-9.2	-15.9	0.0									
	AV-8	29750	59500	4	77.3	74	34.8	No	No	Something Else		26.0	36.9	0.0	26.0	-36.9	0.0	-51.3	25.2	4.1	-51.3	-25.2	4.1						
	H-60	23000	46000	1	4	4	82	No	No	Basket Loop	No	0.0	0.0	0.0															
	General	22800	45600	1	6	6	96	No	No	Fabric Loop	Yes	0.0	0.0	0.0															
	General	22800	45600	1	6	6	120	No	No	Fabric Loop	Yes	0.0	0.0	0.0															
	General	22800	45600	1	6	6	144	No	No	Fabric Loop	Yes	0.0	0.0	0.0															
	General	22800	45600	1	6	6	180	No	No	Fabric Loop	Yes	0.0	0.0	0.0															
	General	22800	45600	1	6	6	240	No	No	Fabric Loop	Yes	0.0	0.0	0.0															
	H-3	22050	44100	3	32.56	21.2	20	No	No	Pin	No	14.6	10.6	0.0	14.6	-10.6	0.0	-18.0	0.0	0.0									
	H-1	20000	40000	1	6	6	20	No	No	Bolted	No	0.0	0.0	0.0															
	H-46	20000	40000	4					No	Pin	No																		
	C-2A	19050	38100	1	6	6	20	Yes	Yes	Bolted	No	0.0	0.0	0.0															
	H-60	18720	46800	4	190	82	238	Yes	Yes	Chain Loop	No	69.0	41.0	41.4	69.0	-41.0	41.4	-121.3	18.2	0.0	-121.3	-18.2	0.0						
	H-1	18500	37000	1	10	10	24	No	No	Something Else	No	0.0	0.0	0.0															
	General	15100	30200	4	32	13	17	No	No	Hook	No	15.6	6.5	0.0	15.6	-6.5	0.0	-15.6	6.5	0.0	-15.6	-6.5	0.0						
	General	15100	30200	4	47	20	25.5	No	No	Hook	No	23.4	9.7	0.0	23.4	-9.7	0.0	-23.4	9.7	0.0	-23.4	-9.7	0.0						
	General	15100	30200	4	63	26	33.9	No	No	Hook	No	31.2	13.0	0.0	31.2	-13.0	0.0	-31.2	13.0	0.0	-31.2	-13.0	0.0						
	General	15100	30200	4	94	39	50.9	No	No	Hook	No	46.8	19.4	0.0	46.8	-19.4	0.0	-46.8	19.4	0.0	-46.8	-19.4	0.0						
	General	15100	30200	4	125	52	67.5	No	No	Hook	No	62.4	25.9	0.0	62.4	-25.9	0.0	-62.4	25.9	0.0	-62.4	-25.9	0.0						
	General	15100	30200	4	141	59	76.4	No	No	Hook	No	70.2	29.2	0.0	70.2	-29.2	0.0	-70.2	29.2	0.0	-70.2	-29.2	0.0						
	General	15100	30200	4	156	65	84.8	No	No	Hook	No	78.0	32.4	0.0	78.0	-32.4	0.0	-78.0	32.4	0.0	-78.0	-32.4	0.0						
	General	15100	30200	4	188	80	101.8	No	No	Hook	No	93.6	38.9	0.0	93.6	-38.9	0.0	-93.6	38.9	0.0	-93.6	-38.9	0.0						
	General	15100	30200	4	234	100	127.3	No	No	Hook	No	117.0	48.6	0.0	117.0	-48.6	0.0	-117.0	48.6	0.0	-117.0	-48.6	0.0						
	H-1	15000	37500	1	4	3	11	No	No	Pin	No	0.0	0.0	0.0															
	General	15000	30000	1	8	4	96	No	No	Hook	No	0.0	0.0	0.0															
	General	15000	30000	1	8	4	96	No	No	Hook	No	0.0	0.0	0.0															
	General	15000	30000	1	4	4	96	No	No	Fabric Loop	Yes	0.0	0.0	0.0															
	General	15000	30000	1	4	4	120	No	No	Fabric Loop	Yes	0.0	0.0	0.0															
	General	15000	30000	1	4	4	144	No	No	Fabric Loop	Yes	0.0	0.0	0.0															
	General	15000	30000	1	4	4	180	No	No	Fabric Loop	Yes	0.0	0.0	0.0															
	General	15000	30000	1	4	4	240	No	No	Fabric Loop	Yes	0.0	0.0	0.0															
	General	13500	27000	2	34	4	17	No	No	Hook	No	17	0.0	0.0	-17	0.0	0.0												
	General	13500	27000	2	52	4	26	No	No	Hook	No	26	0.0	0.0	-26	0.0	0.0												
	General	13500	27000	2	68	4	34	No	No	Hook	No	34	0.0	0.0	-34	0.0	0.0												
	General	13500	27000	2	102	4	51	No	No	Hook	No	51	0.0	0.0	-51	0.0	0.0												
	General	13500	27000	2	136	4	68	No	No	Hook	No	68	0.0	0.0	-68	0.0	0.0												
	General	13500	27000	2	170	4	85	No	No	Hook	No	85	0.0	0.0	-85	0.0	0.0												
	General	13500	27000	2	204	4	102	No	No	Hook	No	102	0.0	0.0	-102	0.0	0.0												
	General	13500	27000	2	254	4	127	No	No	Hook	No	127	0.0	0.0	-127	0.0	0.0												
	H-3	13100	26200	4					Yes	vertical pins	No	17.0	18.4	0.0	17.0	-18.4	0.0	-17.0	18.4	0.0	-17.0	-18.4	0.0						
	General	12800	25600	4	63	26	34	No	No	Hooks	No	31.4	13.0	0.0	31.4	-13.0	0.0	-31.4	13.0	0.0	-31.4	-13.0	0.0						
	General	12800	25600	4	94	39	51	No	No	Hooks		47.0	19.5	0.0	47.0	-19.5	0.0	-47.0	19.5	0.0	-47.0	-19.5	0.0						
	General	12800	25600	4	125	52	68	No	No	Hooks		62.7	26.0	0.0	62.7	-26.0	0.0	-62.7	26.0	0.0	-62.7	-26.0	0.0						
	General	12800	25600	4	157	65	85	No	No	Hooks		78.4	32.5	0.0	78.4	-32.5	0.0	-78.4	32.5	0.0	-78.4	-32.5	0.0						
	General	12800	25600	4	188	78	102	No	No	Hooks		94.1	39.0	0.0	94.1	-39.0	0.0	-94.1	39.0	0.0	-94.1	-39.0	0.0						
	General	12800	25600	4	220	91	119	No	No	Hooks		109.8	45.5	0.0	109.8	-45.5	0.0	-109.8	45.5	0.0	-109.8	-45.5	0.0						
	General	12800	25600	4	251	104	136	No	No	Hooks		125.5	52.0	0.0	125.5	-52.0	0.0	-125.5	52.0	0.0	-125.5	-52.0	0.0						
	General	12800	25600	4	282	117	152	No	No	Hooks		141.1	58.4	0.0	141.1	-58.4	0.0	-141.1	58.4	0.0	-141.1	-58.4	0.0						
	General	12800	25600	4	314	130	169	No	No	Hooks		156.8	64.9	0.0	156.8	-64.9	0.0	-156.8	64.9	0.0	-156.8	-64.9	0.0						
	General	12000	24000	1	4	4	72	No	No	Fabric Loop	Yes	0.0	0.0	0.0															
	General	12000	24000	1	4	4	96	No	No	Fabric Loop	Yes	0.0	0.0	0.0															
	General	12000	24000	1	4	4	120	No	No	Fabric Loop	Yes	0.0	0.0	0.0															
	General	12000	24000	1	4	4	144	No	No	Fabric Loop	Yes	0.0	0.0	0.0															
	General	12000	24000	1	4	4	180	No	No	Fabric Loop	Yes	0.0	0.0	0.0															
	General	12000	24000	1	4	4	240	No	No	Fabric Loop	Yes	0.0	0.0	0.0															

6. APPENDIX F. (Sling ID Manual)

7. APPENDIX G. (Renders of System)

Figure G1

The Universal Proof Loader (Hydraulic Gantries Fully Extended)

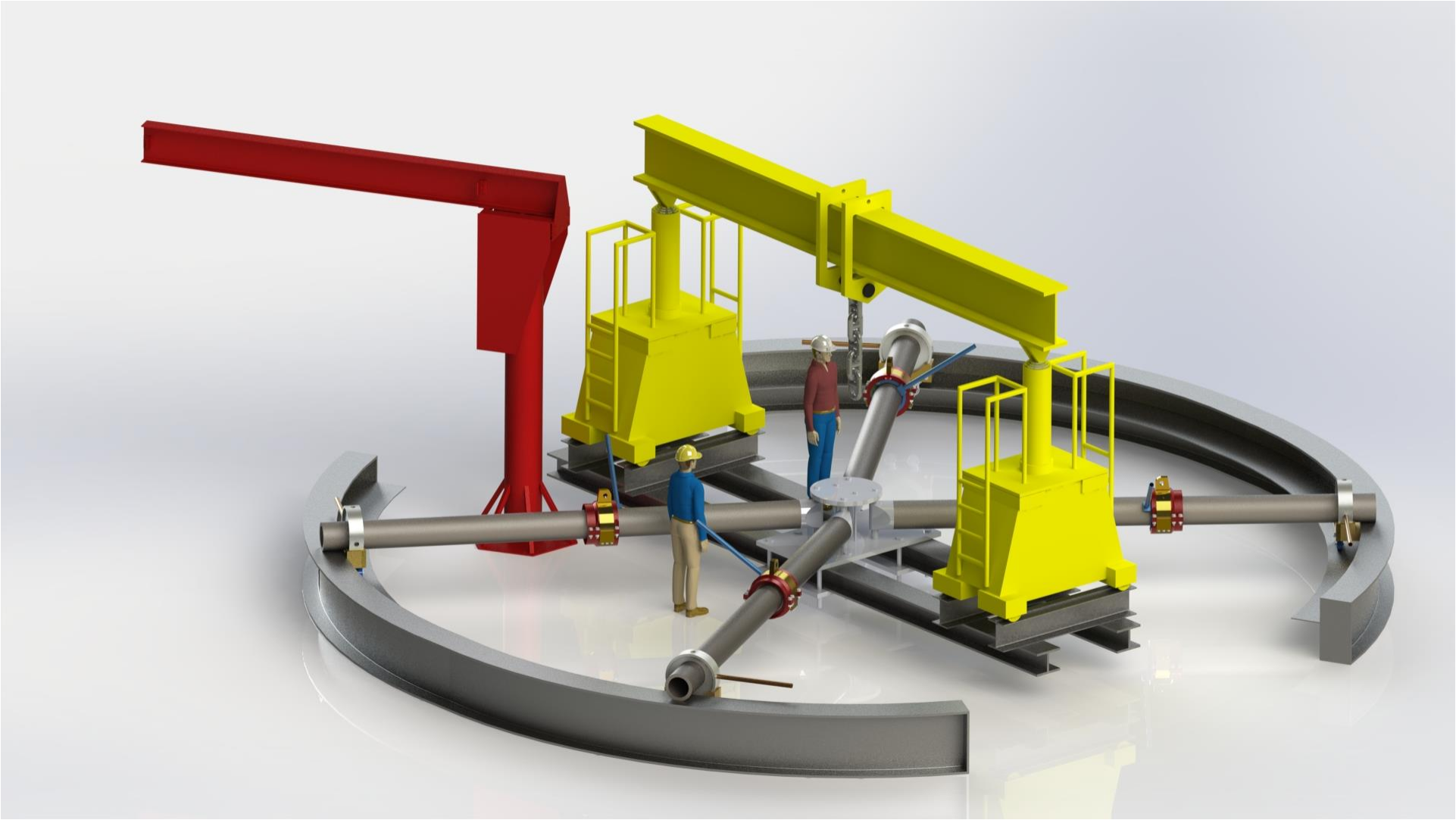

Figure G2

The Universal Proof Loader (Hydraulic Gantries Fully Lowered with Operators for Scale)

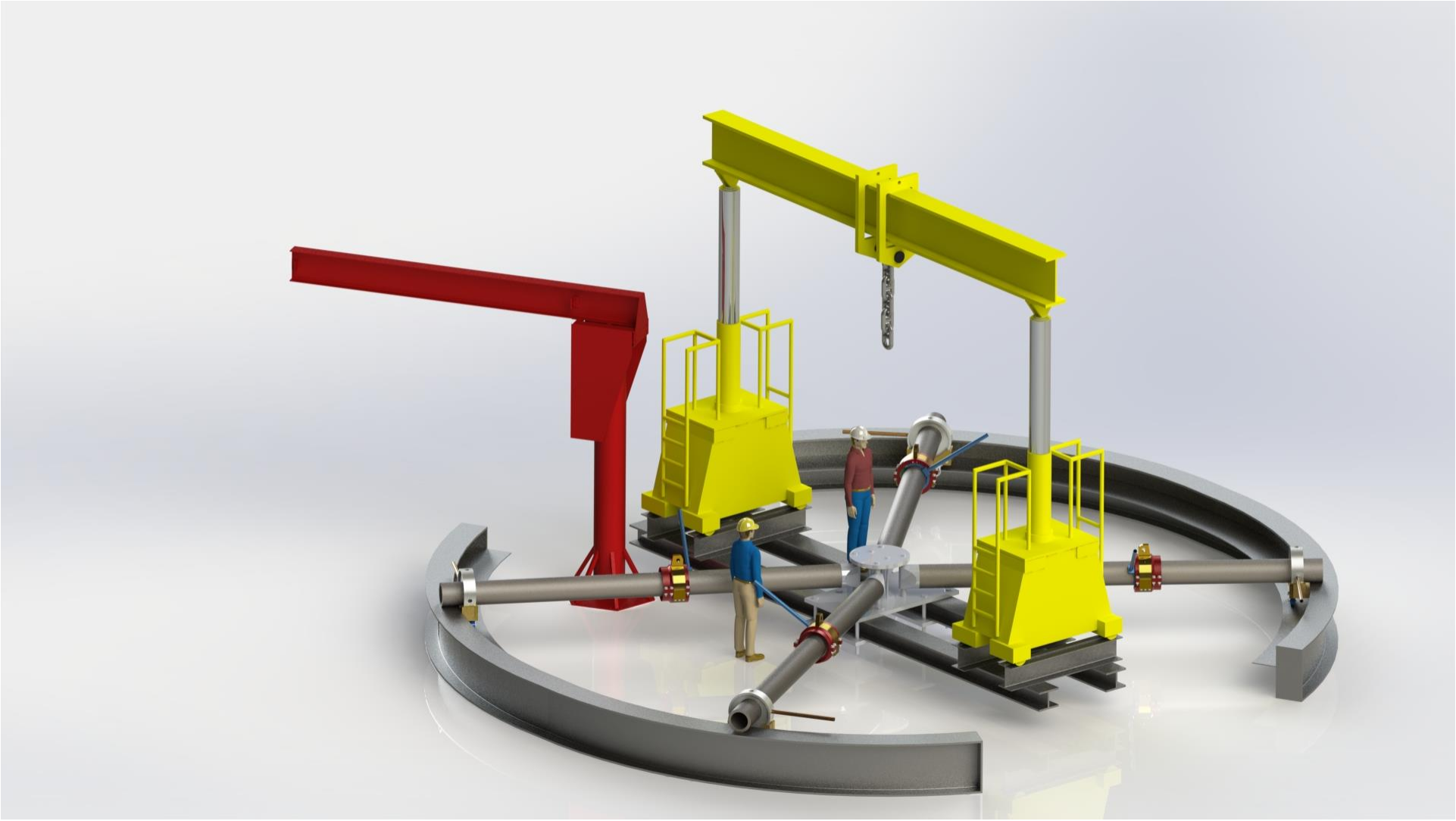

Figure G3

The Universal Proof Loader (Hydraulic Gantries 1st Stage Extended with Operators for Scale)

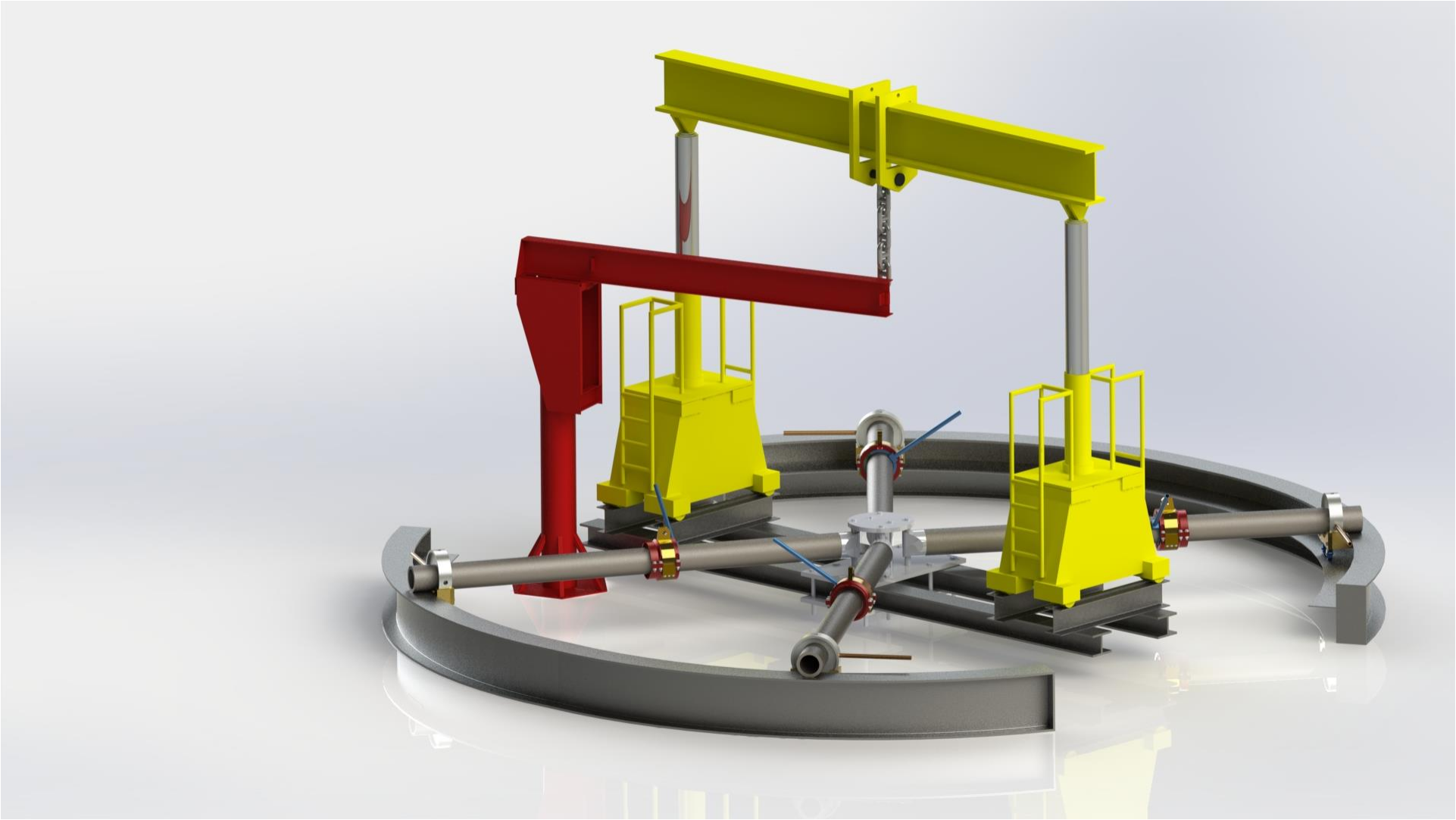

Figure G4

The Universal Proof Loader (Hydraulic Gantries 1st Stage Extended and Jib Crane Positioned as if Delivering a Sling)

Figure G5

The Universal Proof Loader (Hydraulic Gantries 1st and 2nd Stages Extended)